Soft Sided Sample Door Case (with Logo)

Order Part #197574

Holds (5) 12" x 23" Sample Doors, a Notepad & WalzCraft Brochure

Signature Series Key:
S661 Montgomery

Chapter T Table of Contents

Section #	Section Name/Contents	Page #
T.1	Color Blocks	T.1.2
	◦ Color Blocks - Stain, SolidTone®	T.1.2
	◦ Solid Wood Species Sample/Non-Inventory Color Block	T.1.3
	◦ Stained Veneer Color Block	T.1.3
	◦ Reconstituted Veneer/Architectural Grade Sample Set	T.1.4
T.2	Product Samples	T.2.1
	◦ Sample Doors & Drawer Fronts	T.2.1
	◦ Door / Drawer Front Connection (Steel Dowels, Plastic Spacers)	T.2.1
	◦ Designer Glass Sample Box	T.2.2
	◦ Refacing Material Sample Set	T.2.2
	◦ High Pressure Laminate (HPL) Sample Set	T.2.2
	◦ Refacing Molding Sample Set	T.2.3
	◦ 6” Sample Products Program	T.2.5
	◦ WalzCraft® Promotional Items	T.2.5
T.3	Wall Mounted Sample Door Display Kit	T.3.1
T.4	Door/Drawer Front Carrying Cases	T.4.1
	◦ Hard Sided Sample Door Case - 13¾" x 11⁹⁄₁₆" x 16⁵⁄₁₆"	T.4.1
	◦ Soft Sided Sample Case - 13" x 5⅝" x 17"	T.4.1
	◦ Soft Sided Sample Case - 13" x 3" x 23"	T.4.2
T.5	Customizable Marketing Cards	T.5.1

In-Stock Color Blocks

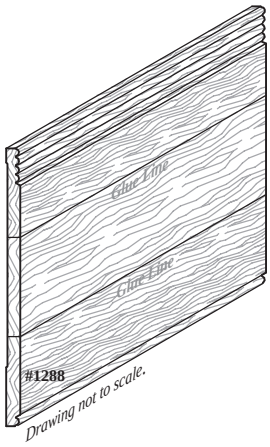

In-Stock Solid Wood Color Block Sets			Stains	SolidTone®	STWG
Wood Species	Color/Grain	Grade	Qty/Set	Qty/Set	Qty/Set
ALDER		Natural/Standard Grade	13		
CHERRY		Natural/Standard Grade	16		
HICKORY		Natural/Standard Grade	6		
MAPLE - HARD		Natural/Standard Grade	17		
MAPLE - HARD / SOFT MIXED		Value/Budget/Paint Grade		20	
OAK - RED / WHITE MIXED		Value/Budget Grade			20
OAK - RED		Natural/Standard Grade	18		
OAK-WHITE		Natural/Standard Grade	10		
WALNUT		Natural/Standard Grade	5		

Ordering & Pricing Notes: In-Stock Solid Wood Color Blocks

	Ordering Guidelines	
1	**Order Forms**	For in-stock color block sets and starter variety packs, please use ***Sample Color Block Order Form (E•Z Form #5.5)***
		For individual in-stock color blocks, please use ***Sample Color Block Order Form (E•Z Form #5.6)***
2	**SolidTone® Plus Color Block**	When ordering a SolidTone® Plus finish, please indicate "SolidTone® Plus" in the ***Special Instructions*** column on the order form.
	Pricing	
1	**Pricing**	Please see ***Section T.1*** of our current **Wholesale Pricing Catalog**.

Technical Notes: In-Stock Solid Wood Color Blocks

	Dealer Aid Options (Chapter T)	
1	**Color Block Construction**	In-Stock color blocks are constructed using 3 glue-ups to provide a more realistic color comparison. • Shows some of the natural color and grain variation present in that particular wood species. • Approximately 5"W x 5⅝"L [127.0mm x 142.9mm]. • Made from color block molding **#1288** (see ***Section N.9*** for unfinished 8' [2438.4mm] lengths).
2	**Color Block Sets**	For a list of the wood species and color combinations that are available per set, please refer to our website. • Use part **#195989** for all stain, SolidTone® and STWG sets (does not include Starter Variety Packs). • All solid wood color blocks within a full set will be chained together.
3	**Starter Variety Packs**	**Stain (#195983)**: Features 18 of our most popular wood species and color combinations. • Incudes Wiping, Spray No Wipe and Water Based Wiping stain colors.
		SolidTone® (#195985): Features 10 of our most popular colors.
4	**Life Expectancy**	**36 month life expectancy for Alder, Hickory, Maple, Oak-Red, Oak-White** and **Walnut.** • We recommend ordering new samples if the current date exceeds the ship date by more than 3 years.
		24 month life expectancy for Cherry. • We recommend that you order new samples if the current date exceeds the ship date by more than 2 years.
5	**Color Block Labels**	Color blocks will be labeled to identify the wood species, stain or SolidTone® color and ship date.

In-Stock Color Blocks - END

WalzCraft® .com © (Phone) 1-800-237-1326 6:00AM - 5:30PM CST (24 Hour Fax) 1-608-781-3667

Non-Inventory Color Blocks / Wood Species Samples

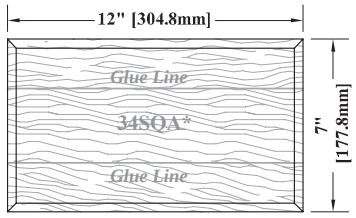

D17 OSE

#183099 - Solid Wood Sample, Unfinished Only

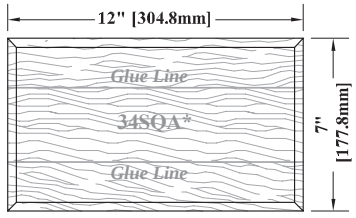

D17 OSE

#183100 - Solid Wood Sample, Stain Only

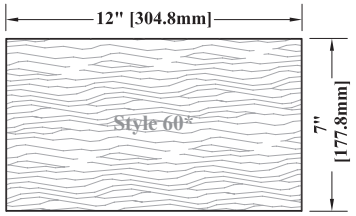

EBT201 / EBT201-R (D7 OSE)

#189347 - MDF / Veneer, Stain Only

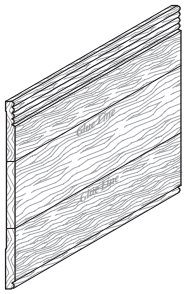

#198667 - Maple-Hard / Soft Mix, SolidTone® Only

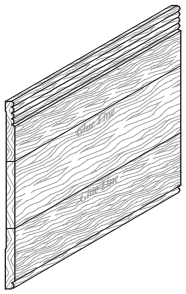

#198668 - Oak-Red / White Mix, STWG Only

Ordering & Pricing Notes: Non-Inventory Color Blocks / Wood Species Samples

	Ordering Guidelines	
1	**Order Forms**	Please use ***Sample Color Block Order Form (E•Z Form #5.6)*** for all Non-Inventory Color Blocks / Wood Species Samples.
2	**SolidTone® Plus Color Block**	When ordering a SolidTone® Plus finish, please indicate "SolidTone® Plus" in the ***Special Instructions*** column on the order form.
	Pricing	
1	**Pricing**	Please see ***Section T.1*** of our current **Wholesale Pricing Catalog**.

Technical Notes: Non-Inventory Color Blocks / Wood Species Samples

	Dealer Aid Options (Chapter T)	
1	**Solid Wood**	If a specific solid wood species / grade is preferred that is not listed in the chart on the previous page, an individual **Non-Inventory Color Block / Wood Species Sample** can be ordered.
		Constructed from 2 or more edge glued staves to provide a more realistic color comparison.
		Unfinished Wood Species Blocks and Non-Inventory Color Blocks with stain will be ¾" thick x 12" wide x 7" high. • Can be ordered in any of WalzCraft's wood species / color-grain / grade combinations from ***Chapter S***. • Can be ordered prefinished in any of the stain colors listed as available within the grids in ***Section R.1***.
		Non-Inventory Color Blocks with a SolidTone® or SolidTone® WoodGrain finish will be ¼" thick x 5" wide x 5⅝" long. • Can be ordered prefinished in any of the SolidTone® and SolidTone® WoodGrain colors listed as available within the grids in ***Section R.2***.
2	**Veneer**	If a finished veneered sample is required for your project, an individual **Stained Veneered Color Block** can be ordered.
		Constructed with an MDF core as a **Style 60*** drawer front using **EBT201** or **EBT201-R** (*see* ***Sections B.10*** & ***B.11***).
		Stained Veneer Color Blocks will be ¾" thick x 12" wide x 7" high [19.1mm x 304.8mm x 177.8mm].
		Can be ordered in any of WalzCraft's veneers from ***Sections B.10 & B.11*** along with any of the stain colors listed as available within the grids in ***Section R.1***. ◦ For Reconstituted veneer, we recommend either a Natural / Clear Coat ***(no stain)*** or a light stain color only.
4	**Life Expectancy**	**36 month life expectancy for Alder, Hickory, Maple, Oak-Red, Oak-White** and **Walnut.** • We recommend ordering new samples if the current date exceeds the ship date by more than 3 years.
		24 month life expectancy for Cherry. • We recommend that you order new samples if the current date exceeds the ship date by more than 2 years.
5	**Color Block Labels**	Color blocks will be labeled to identify the wood species, stain or SolidTone® color and ship date.

Non-Inventory Color Blocks / Wood Species Samples - END

T

Reconstituted Veneer/Architectural Grade Sample Set

Ordering & Pricing Notes: Reconstituted Veneer/Architectural Grade Sample Set

		Ordering Guidelines
1	**Order Forms**	Please use ***Moldings & Miscellaneous Order Form (E•Z Form #5)***.
2	**Part Number**	Use **WCI #166596** when ordering.
		Pricing
1	**Pricing**	Please see ***Section T.1*** of our current **Wholesale Pricing Catalog**.

Technical Notes: Reconstituted Veneer/Architectural Grade Sample Set

		Dealer Aid Options (Chapter T)
1	**Included in Set**	Set includes one 3⅝" x 5¼" [92.1mm x 133.4mm] Non-Adhesive Paper Back Reconstituted Veneer sample in each of our available wood species.
		Finish Options (Chapter R)
1	**Finish**	Available unfinished only.
		Wood Specie Options (Chapter S)
1	**Wood Species "Looks"**	• Ash • Birch/Maple • Cherry • Ebony • Fir • Mahogany • Maple/Birch • Oak • Rosewood • Teak • Walnut • Wenge
2	**Maple & Birch**	Since Reconstituted Veneers are a ***"representation of a wood species"***, and are not actually a veneer comprised of the wood species indicated, the same reconstituted veneer material is used for both Maple *(Reconstituted)* - Straight Grain and Birch *(Reconstituted)* - Straight Grain.

T

Reconstituted Veneer/Architectural Grade Sample Set - END

Sample Doors & Drawer Fronts

If you are interested in seeing a certain door style, a particular wood species, grade or finish color, we suggest ordering a sample that can be used in your showroom or on your job site. Sample doors and drawer fronts will receive a ***30% discount***. See ***Section T.2*** of our **Wholesale Pricing Catalog** for more information.

- It is WalzCraft's policy to affix a label to the backside of each sample to identify the style, wood species/grade and other manufacturing specifications to provide you with pertinent information required to place an order with the exact options and features on your sample.
- Labels **will always** be affixed to the **backside** of pre-finished products unless requested otherwise. Labels may be shipped loose upon request.
- When ordering unfinished samples, WalzCraft assumes that you intend to apply a finish to the product when you receive it. Given this, a peel & stick sample label will be taped to the backside of your sample, providing you with the options on your unfinished sample.
- Once you've applied the finish to your sample, simply remove the peel & stick backer from the label and permanently adhere it to the backside of your sample for future reference.
- A 12"W x 15"H [304.8mm x 381.0mm] door can be easily handled and transported in one of WalzCraft's Hard or Soft Sided Sample Cases found in ***Section T.4***. (**Sample Case Part #'s 171403, 136273 and 136274**).
- Please use ***Door and/or Drawer Front Order Forms (E•Z Forms #2 and #3)***.

Signature Series Key:
S418, S320, S402, S370, S495

Door/Drawer Front Connection (Steel Dowels, Plastic Spacers)

Door/Drawer Front samples can be attached to each other with **steel dowels**, which include an ⅛" [3.2mm] thick spacer in between the door and drawer front. These should be ordered at the sizes noted below in order to fit WalzCraft's larger Soft Sided Sample Cases in ***Section T.4***.

Sample case part **#171404** and **#137525** will accommodate:

- (5) Sample doors with attached drawer fronts.
  - Doors = 12"W x 15"H [304.8mm x 381.0mm]
  - Drawer Fronts = 12"W x 6"H [304.8mm x 152.4mm]
- To accommodate the steel dowels, outside edge profile options are limited; please reference the **Outside Edge Profile Compatibility** chart under ***Technical Information*** on our website.
- Door/Drawer Front stile widths must be 1½" [38.1mm] or greater to utilize this connection method.
- Please use the ***Special Instructions*** section on your order form to indicate which door and drawer front should be connected.
- The dowels/spacers can also be purchased separately using Part **#153968**.
  - Includes one steel dowel and one plastic spacer.
  - Use ***Molding & Miscellaneous Order Form (E•Z Form #5)***.
  - Doors and drawer fronts will not be predrilled.

Sample Door/Drawer Front Combination, Connected Together with 2 Steel Dowels and 2 Plastic Spacers.

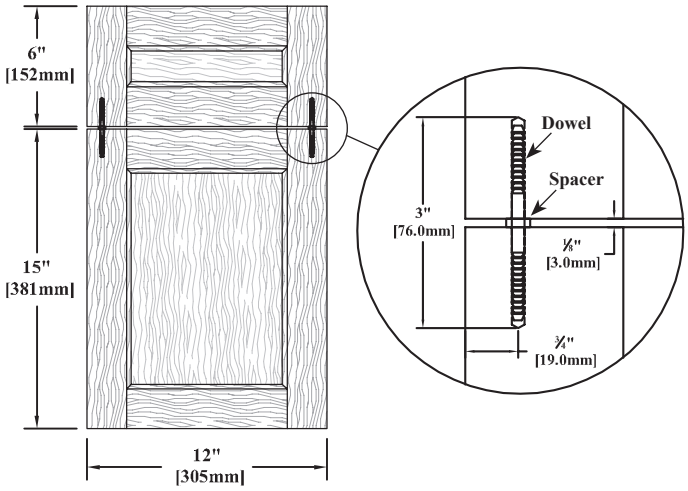

T

Continued on next page...

Designer Glass Sample Box

- **Part #162483**
- Included in each Sample Box:
  - 12 - 3" x 7" Designer Glass samples.
  - 1 - 3" x 7" Designer Glass sample with optional sandblasting.
  - 1 - 3" x 3" Clear Beveled sample.
- Each sample is labeled, to identify the Designer Glass Pattern.
- Please use ***Molding & Miscellaneous Order Form (E•Z Form #5)***.

Refacing Material Sample Set

- **Part #171674**
- 24 - 4" x 4" [101.6mm x 101.6mm] Refacing material samples.
- Each sample is labeled to identify the material.
- Held together with 14" [355.6mm] Releasable Ty Wrap.
- Each set includes one of the following:
  1. ⅛" Plywood, MDF Core, A4, Maple, Natural/Clear Coat (*no stain*).
  2. ¼" Plywood, MDF Core, A4, Maple, Natural/Clear Coat (*no stain*).
  3. ⅛" Raw HDF – Unfinished
  4. ¼" Raw MDF – Unfinished
  5. ⅛" Solid Wood Refacing Stock, Maple, Natural/Clear Coat (*no stain*).
  6. ⅜" Solid Wood Refacing Stock, Maple, Natural/Clear Coat (*no stain*).
  7. ¼" Solid Wood Refacing Stock, Maple, Natural/Clear Coat (*no stain*).
  8. Non-Adhesive Resin Back Veneer, Maple, Natural/Clear Coat (*no stain*).
  9. Non-Adhesive Wood Back Veneer, Maple, Natural/Clear Coat (*no stain*).
  10. Pressure Sensitive Wood Back Veneer, Maple, Natural/Clear Coat (*no stain*).
  11. Non-Adhesive Paper Back Veneer, Maple, Natural/Clear Coat (*no stain*).
  12. Pressure Sensitive Paper Back Veneer, Maple, Natural/Clear Coat (*no stain*).
  13. Non-Adhesive Paintable Laminate, Unfinished.
  14. Non-Adhesive Paintable Laminate, Classic White (SolidTone Finish).
  15. Pressure Sensitive Paintable Laminate, Unfinished.
  16. Pressure Sensitive Paintable Laminate, Classic White (SolidTone Finish)
  17. 3D Laminate (RTF), Pressure Sensitive Adhesive Back, White Crystal
  18. 3D Laminate (RTF), Phenolic Back, White Crystal
  19. 3D Laminate (RTF), Pressure Sensitive Adhesive Phenolic Back, White Matte
  20. Decorative Laminate Veneer (DLV), Non-Adhesive Back, Coffee Groovz (AuthenTICK Texture)
  21. Decorative Laminate Veneer (DLV), Non-Adhesive Back, White (Suede Texture)
  22. Decorative Laminate Veneer (DLV), Pressure Sensitive Adhesive (PSA) Back, White (Suede Texture)
  23. Decorative Laminate Veneer (DLV), Non-Adhesive Back, Aria (Medina Texture)
  24. Decorative Laminate Veneer (DLV), Non-Adhesive Back, Licorice Groovz (AuthenTICK Texture)
  25. Decorative Laminate Veneer (DLV), Non-Adhesive Back, Arctic Groovz (AuthenTICK Texture)

***** Please use ***Molding & Miscellaneous Order Form (E•Z Form #5)***.

High Pressure Laminate (HPL) Sample Set

- **Part #186136**
- 6 - 2" x 2¾" [50.8mm x 69.9mm] High Pressure Laminate (HPL) samples.
- Each sample is labeled to identify the material.
- All samples within the set will be chained together.
- Each set includes one of the following:
  1. Formica #8843-WR - Natural Ash (Woodbrush Finish)
  2. Formica #8842-WR - Weathered Ash (Woodbrush Finish)
  3. Formica #7813-SP - Cardboard (Sculpted Finish)
  4. Formica #949-58 - White (Matte Finish)
  5. Formica #5343-MC - Possum (Micro Dot Finish)
  6. Formica #6212-58 - Wheat Strand (Matte Finish)

***** Please use ***Molding & Miscellaneous Order Form (E•Z Form #5)***.

Continued on next page...

T

Refacing Molding Sample Set

- **Part #170934**
- 16 - 6" [152.4mm] cabinet refacing moldings.
- Solid Maple, Natural/Clear Coat (*no stain*)
- Each sample is labeled to identify the molding profile.
- All samples within the set will be chained together.
- Use ***Molding & Miscellaneous Order Form (E•Z Form #5)***.

- **Each Refacing Molding Sample Set includes the following moldings:**
  1. #119 - Crown Molding
  2. #942 - Crown Molding
  3. #1131 - Wainscot Cap Molding
  4. #2123 - Outside Corner Molding
  5. #112 - Base Shoe Molding
  6. #108 - Cove Molding
  7. #2113 - 3⁄16" Refacing Molding
  8. #1301 - Outside Edge Molding
  9. #114 - Outside Corner Molding
  10. #1134 - Outside Corner Molding
  11. #2122 - Outside Corner Molding
  12. #147 - Scribe Molding
  13. #1844 - Scribe Molding
  14. #1286 - Panel Splice Molding
  15. #870 - ⅛" Plywood Molding
  16. #2023 - ¼" Plywood Molding

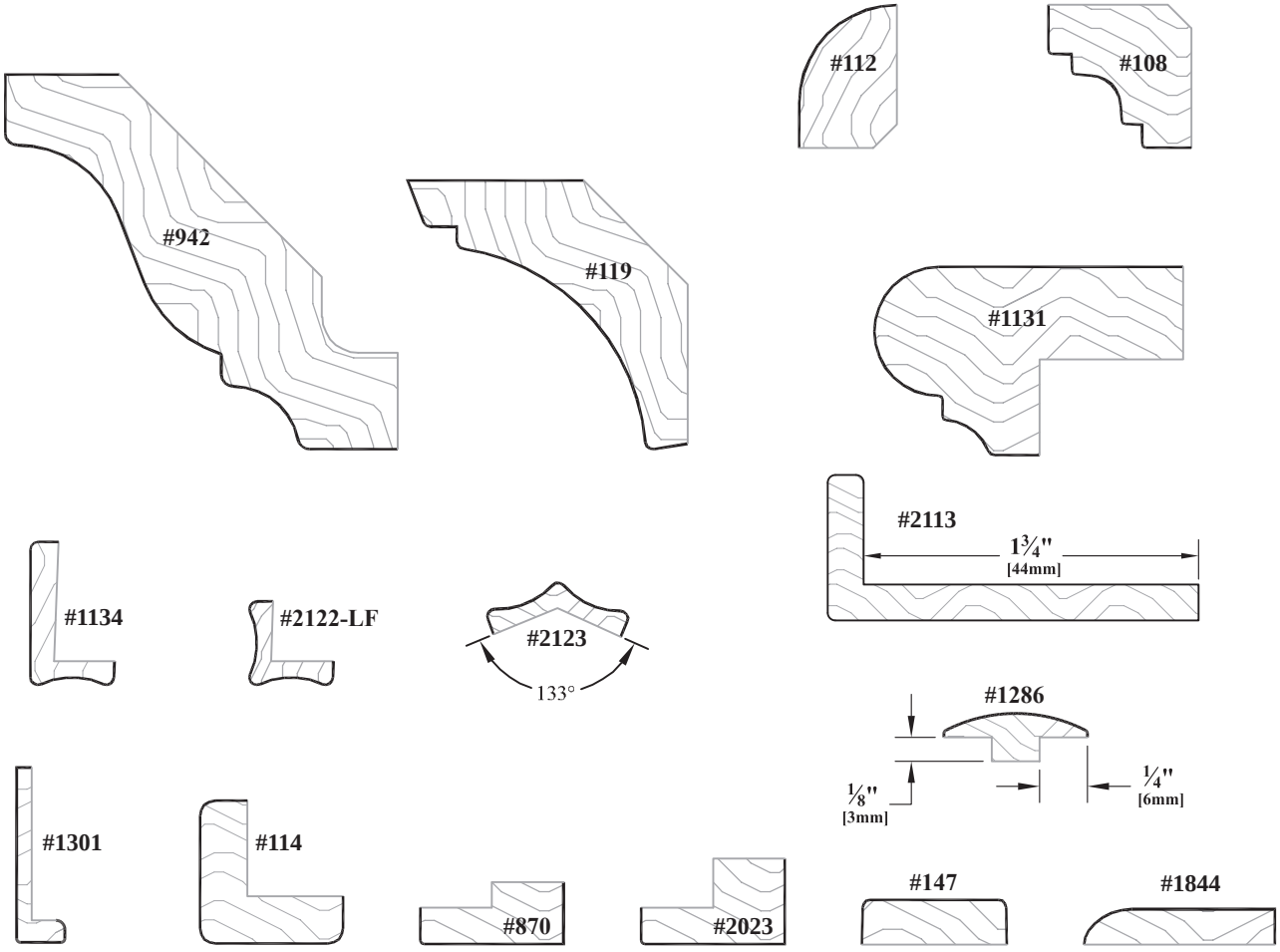

Continued on next page...

▶ **For PRICING** ▶ *See Section **T.2*** in our current Wholesale Pricing Catalog.

T

6" [152.4mm] Sample Products Program

WalzCraft can provide a 6" [152.4mm] unfinished maple sample of any of the following:

- Moldings, excluding Canopy molding ***(Chapter N)***
- Insert Patterns for Crown, Frieze and Light Valance Molding (***Website***)
- Beaded Face Frame Stock - available at 1½" [38.1mm] width
- Profiled Stock:
  - Outside Edge Profiles, Stile & Rail Profiles, Miscellaneous Joinery (MJ's), Accent Profiles - available at 2¼" [57.1mm] width unless the profile selection indicates otherwise
  - Center Panel Profiles - available at 3" [76.2mm] width
- Joint Assembly Methods (JAM's) - available at 2¼" [57.1mm] width
- Rubber Glass Retainer
- Standard Wood Veneer Edgebanding and Reconstituted Veneer Edgebanding (available in any wood species from ***Section K.4***)
- Please contact our Customer Support Team to request other samples that you may wish to see.

WalzCraft® Promotional Items

Please contact our Customer Support Team to order any of the following Promotional Items:

- WalzCraft Product Specifications Catalog
- WalzCraft Wholesale Pricing Catalog
- WalzCraft *"Signature Series"* Colored Brochure
- In-House Stock Sample Doors
- In-House Stock Sample Drawer Box
- 3D Laminate (RTF) Foil Swatches ***(Section V.1)***
- Decorative Laminate Veneer (DLV) Stile & Rail Profile Sample Set ***(Section V.2)***
  - **Part #184580**
- Customizable Marketing Card Sample (qty of 1) ***Option 1***
  - **Part #184707**
- Customizable Marketing Card Sample (qty of 1) ***Option 2***
  - **Part #191163** (Includes Before/After Refacing Image)
- Order Forms

Product Samples - END

Wall Mounted Sample Door Display Kit

Wall Mounted Sample Door Display Kit (Holds up to 30 Doors)

Shown with ***"Right Swing"*** clips

Wall Mounted Sample Door Display Kits are available for displaying your sample doors and drawer fronts.

- Easy to flip through your samples and remove them if needed for an up-close look.
- Effortless to assemble, and has a flexible design that displays your product beautifully.
- Can be mounted on a wall, or anywhere you can imagine.
- Each kit includes an upper aluminum rail, a lower aluminum rail and one pack of 15 pair of mounting clips (for mounting 15 doors).
  - The mounting clips are available in either all ***"Left Swing"*** or all ***"Right Swing"***. For example, right swing clips mount on the right side of the door when facing it, and left swing clips mount on the left side of the door when facing it.
- Each set of rails will hold a maximum 30 doors.
  - To fill all 30 spots, an additional pack of 15 pair of mounting clips will need to be ordered.
- Aluminum rails measure 45" [1143.0mm] long with hole spacing 1½" [38.1mm] on center.
- Additional mounting clips are offered in packs of 15 pair (for mounting 15 doors).
  - Specify ***"Left Swing"*** or ***"Right Swing"*** when ordering.
- Please use ***Molding & Miscellaneous Order Form (E•Z Form #5)***, and the following part numbers:
  - **Part #160428 -** Sample Display Kit with ***"Left Swing"*** Clips
  - **Part #160430 -** ***"Left Swing"*** Mounting Clip Add-On Pack (15 pair of clips for mounting 15 doors)
  - **Part #160429 -** Sample Display Kit with ***"Right Swing"*** Clips
  - **Part #160431 -** ***"Right Swing"*** Mounting Clip Add-On Pack (15 pair of clips for mounting 15 doors)

OS

Continued on next page...

T

OS = **Product outsourced from other vendor.**

Wall Mounted Sample Door Display Kit Installation Instructions

Step 1) Place sample door on work surface face down. Be sure to protect the face from scratches.

Step 2) Place the hinge with the longer pin on the top of the door.
- Place the hinge with the shorter pin on the bottom of the door.
- Drill pilot holes and attach hinges to door.

Step 3) Mount the aluminum angle on the wall or any where you want and insert doors into the rail.

Note: Right swing hinges mount on the right side of the door when facing it, and left swing hinges mount on the left side of the door when facing it.
- We recommend hinging all doors so they swing in the same direction.

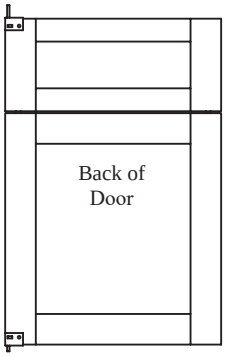

"Right" Swing

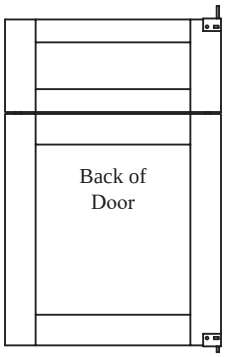

"Left" Swing

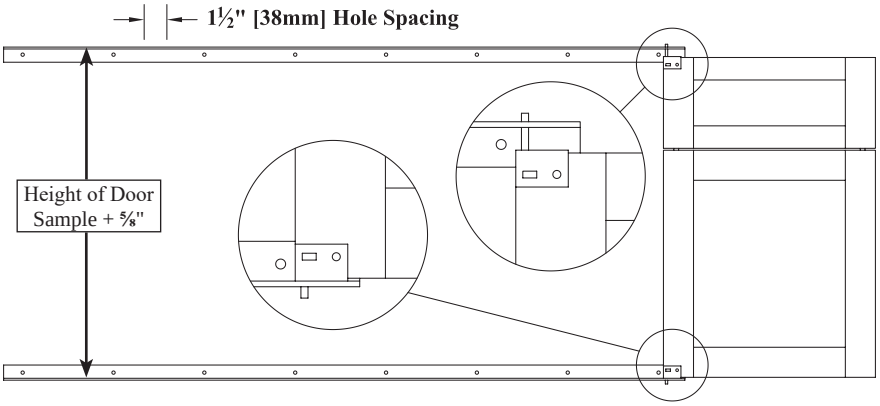

Wall Mounted Sample Door Display Kit - END

T

Dealer Aid Sample Cases

Sample cases protect your investments in dealer aids and are a great tool for in-house sales calls or presentations.

- Available in both hard and soft sided cases.
- Please use ***Molding & Miscellaneous Order Form (E•Z Form #5)***.
- Sample Cases do not include sample doors, drawer fronts or any other sales material.

Soft Sided Sample Door Case *(Doors/Drawer Fronts Not Included)*

- This 13"W x 23"H x 5⅝"D soft sided case is designed to hold up to five door samples at ¾" thick each.
- Accommodates individual doors or door/df combinations (see ***Section T.2***) with an overall size of 12"W x 21"H [304.8mm x 533.4mm].
- Available with or without embroidered WalzCraft logo.
- Includes the following:
  - Heavy duty flap with zipper closure.
  - Adjustable & removable shoulder strap with separate handles for two carrying options.
  - Four removable padded dividers that maintain separation and help protect samples.
- Exterior/Interior Material: Made from a heavy duty water repellent fabric.
- Sample doors/drawer fronts are ***not included*** with the case.

#197574 — *Soft Sided Sample Door Case (with Logo)*

OS

#197569 — *Soft Sided Sample Door Case (without Logo)*

OS

Hard Sided Sample Door Case *(Doors/Drawer Fronts Not Included)*

- This 13¾"W x 16⁵⁄₁₆"H x 11⁹⁄₁₆"D hard sided case is designed to hold up to eight samples.
- Accommodates individual doors with an overall size of 12"W x 15"H [304.8mm x 381.0mm].
  - Able to simultaneously hold three doors up to ¾" thick, three doors up to 1¼" thick and two doors up to 1⅝" thick.
  - Substitute one of the 1⅝" thick doors for a small three ring binder or a WalzCraft Specifications Catalog and Color Brochure.
- Only available without WalzCraft logo.
- Includes the following:
  - Eight slots that maintain separation and help to protect door samples.
  - Seven felted dividers that are removable to customize your sample door storage needs.
- Exterior - Black Vinyl
- Interior - Black Fabric Lining
- Sample doors, 3-ring binder, Specifications Catalog and Color Brochure are ***not included*** with the case.

#136274 — *Hard Sided Sample Case*

OS

Door/Drawer Front Carrying Cases - END

OS = **Product outsourced from other vendor.**

▶ **For PRICING** ▶ *See Section **T.4*** in our current Wholesale Pricing Catalog.

WalzCraft®.com © (Phone) 1-800-237-1326 6:00AM - 5:30PM CST (24 Hour Fax) 1-608-781-3667