Hand Pull Rout Options

Signature Series Key:
S173 Richmond (HR400), S348 Salem (HR500)

Finger Pull Rout Options

Signature Series Key:
S477 Modena (FP300), S119 Hurst (FP400)

Table of Contents

35mm Hinge Bore

HBP100 — Single 35mm Bore Only

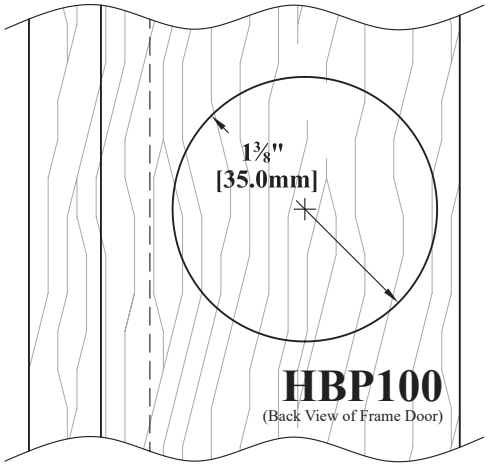

HBP200 — For Press-In Dowel Hinges

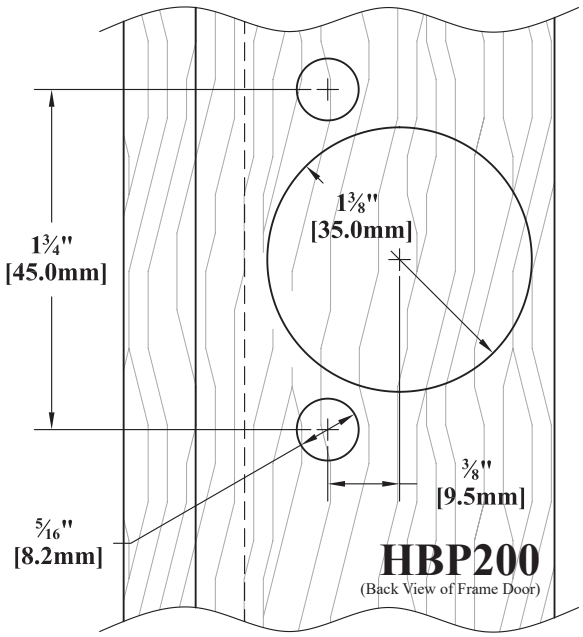

** Fits most Salice and Blum hinges and some Grass hinges. **

HBP400 — For Screw-In Hinges

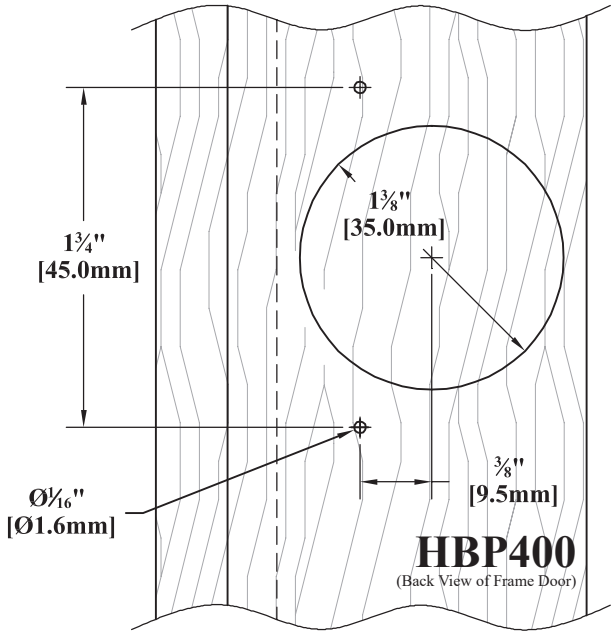

** Fits most Salice and Blum hinges and some Grass hinges. **

▶ **For PRICING** ▶ *See Section **F.1*** in our current Wholesale Pricing Catalog.

35mm Hinge Bore

HBP300 — For Press-In Dowel Hinges

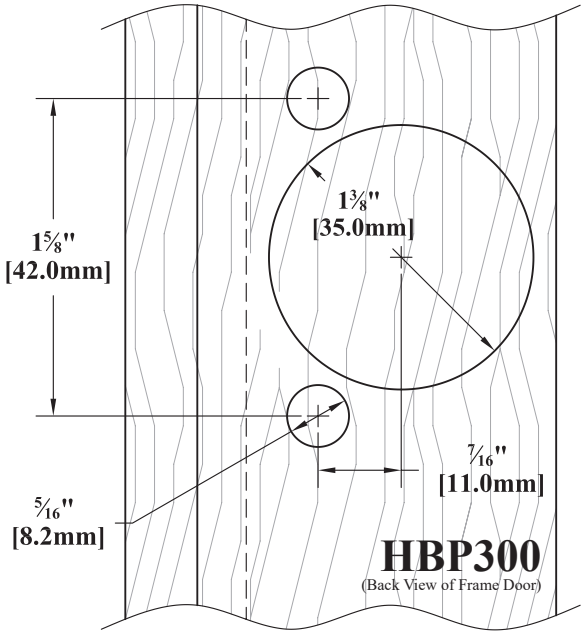

** Fits some Grass hinges. **

HBP500 — For Screw-In Hinges

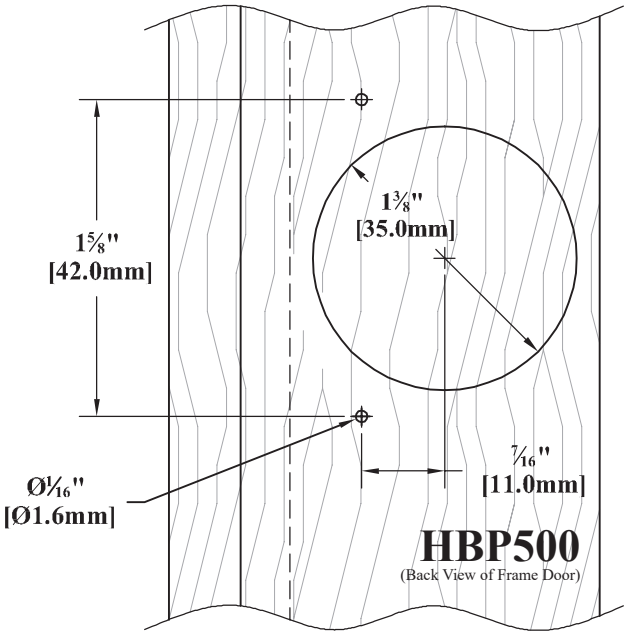

** Fits some Grass hinges. **

35mm Hinge Bore - Cup Depth Options

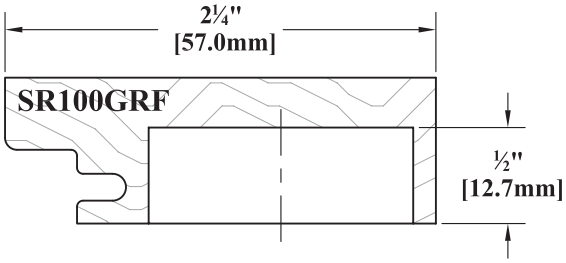

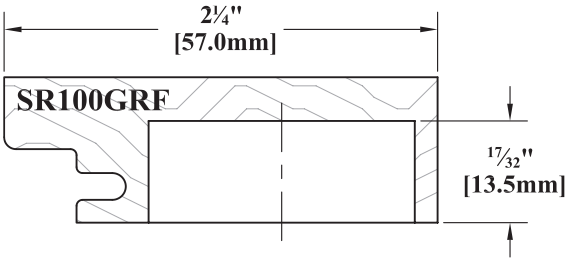

35mm Hinge Bore - Cup Drilling Distance Options

The "Cup Drilling Distance", is the distance from the edge of the door to the edge of the hinge bore.

- Specify one of the following "Cup Drilling Distances" from the list shown below.
  - Distances are measured on the back side of the door, from the outside edge to the edge of the hinge hole.

-5.0mm (-0.197")	2.0mm (.079")	2.5mm (.098")	3.0mm (.118")	4.0mm (.158")	5.0mm (.197")	6.0mm (.236")	7.0mm (.276")	8.0mm (.315")

- Minimum width for a GRF Profile with hinge boring is 2" [50.8mm].
- For outside edge compatibility, please refer to the charts on our website: Resources/Technical Information.
- The -5.0mm cup drilling distance is typically used for a Lazy Susan application.

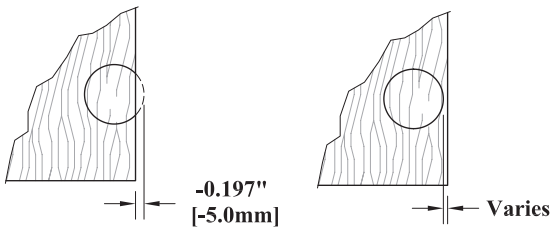

▶ **For PRICING** ▶ *See Section **F.1*** in our current Wholesale Pricing Catalog.

F

35mm Hinge Bore - Placement Options

When viewing the door from the face, please use the abbreviations as noted below to indicate hinge bore placement.

- If some of the doors on your order do not require hinge boring, please indicate this on your order form by writing "NO" in the Hinge Bore column.

"Standard" Hinge Bore Placement

Hinge Boring on Left Stile
Hinge Bore Location = L

Hinge Boring on Right Stile
Hinge Bore Location = R

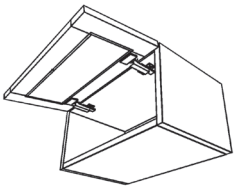

Hinge Boring on Top Rail
Hinge Bore Location = T

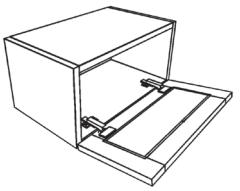

Hinge Boring on Bottom Rail
Hinge Bore Location = B

"Dual" Hinge Bore Placement

R & L = Right & Left

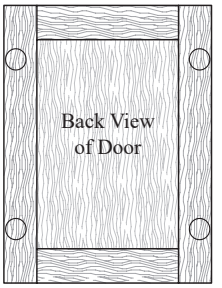

Hinge Boring on Stiles
"Dual Hinge" Shown
"Right & Left" Hinge Bore

T & B = Top & Bottom

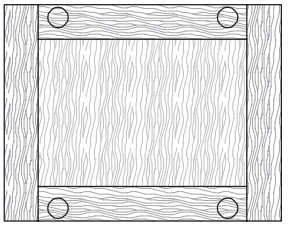

Hinge Boring on Rails
"Dual Hinge" Shown
"Top & Bottom" Hinge Bore

See Dual Hinge Bore notes for more information

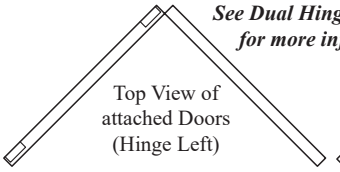

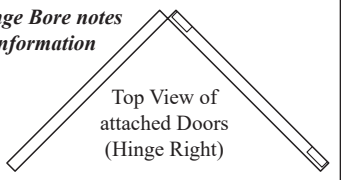

Ordering & Pricing Notes: 35mm Hinge Boring

	Ordering Guidelines	
1	**Order Forms**	Applicable order forms will include spaces to indicate your chosen option.
2	**Ordering Information**	When ordering, please specify the following: • Hinge bore pattern (ex: **HBP200**) • Hinge bore depth (**12.7mm** or **13.5mm**) • Cup drilling distance (from edge of door, ex: **3.0mm**) • Hinge bore placement (ex: Left (**L**), Right (**R**), Top (**T**), Bottom (**B**))
	Pricing	
1	**Pricing**	Please see ***Section F.1*** of our current **Wholesale Pricing Catalog**.

Technical Notes: 35mm Hinge Boring

	Cabinet Door & Drawer Front Options (Chapter B, V)	
1	**Slab & Batten Doors with 165° & 170° Hinges**	Please note that our **Series 200** 165° long arm hinges shown in ***Section I.1*** and the 170° long arm hinges shown in ***Section I.7*** are ***not compatible*** with our standard batten placement (shown on ***page B.9.3)*** when used with our standard hinge bore placement (shown on ***page F.1.10***). **Custom batten placement and/or custom hinge bore placement may be an option.**
2	**"Lazy Susan" Doors with Dual Hinge Bores**	Typically used for 90° corner (lazy susan) cabinets.
		One door has hinge bores on both sides. The opposing door ***may*** or ***may not*** be bored, depending on the type of hardware being used.
		Cup Drilling Distance must be specified for each hinge bore option on each side of the door.
		In most cases, double-folding doors are attached to the cabinet face frame rather than the lazy susan itself.

Notes Continued on Next Page...

Technical Notes: 35mm Hinge Boring...continued		
Convex / Concave Options (Chapter D)		
1	**Convex/Concave Doors**	Convex/Concave doors are available with HBP100 only.

Functional Options (Chapter F)		
1	**HBP100**	Single 35mm hinge bore; hinges sold separately. Please see ***Chapter I***.
2	**HBP200**	A WalzCraft drilling pattern for Salice, Blum and Grass hinges with dowels. One 35mm bore with two 8.2mm dowel holes; hinges with dowels sold separately. Please see ***Chapter I***.
		Fits most Salice and Blum hinges and some Grass hinges. Please note that Grass produces hinges that use both HBP200 and HBP300 drilling patterns. Refer to your Grass hinge specifications for the pattern that matches your chosen hinge.
3	**HBP300**	A WalzCraft drilling pattern for Grass hinges with dowels. One 35mm bore with two 8.2mm dowel holes; hinges with dowels are sold separately. Please see ***Chapter I***.
		Fits some Grass hinges. Please note that Grass produces hinges that use both HBP200 and HBP300 drilling patterns. Refer to your Grass hinge specifications for the pattern that matches your chosen hinge.
4	**HBP400**	A WalzCraft drilling pattern for Salice, Blum and Grass hinges with wood screws. One 35mm bore with two 1⁄16" diameter pilot holes; hinges sold separately. Please see ***Chapter I***.
		Fits most Salice and Blum hinges and some Grass hinges. Please note that Grass produces hinges that use multiple drilling patterns. Refer to your Grass hinge specifications for the pattern that matches your chosen hinge.
5	**HBP500**	A WalzCraft drilling pattern for Grass hinges with wood screws. One 35mm bore with two 1⁄16" diameter pilot holes; hinges sold separately. Please see ***Chapter I***.
		Fits some Grass hinges. Please note that Grass produces hinges that use multiple drilling patterns. Refer to your Grass hinge specifications for the pattern that matches your chosen hinge.
6	**35mm Hinge Hole Repair Kit**	If you've applied a 35mm hinge bore to a door by accident and wish to repair it, you can find "35mm Hinge Hole Repair Kits" at ***www.Rockler.com***.

Sizes / Dimensions		
1	**Hinge Bore Depth**	Standard Options = 12.7mm deep (½") or 13.5mm deep (17⁄32") are available.
		Not all Outside Edge Profiles are available with these options. Please reference the ***Outside Edge Profile Compatibility*** chart on our website under **Resources / Technical Information** for compatible outside edge profiles.
2	**Hinge Bore Placement**	Please see end of section for standard hinge bore placement and quantity based on door height/width.
3	**Minimum Stile & Rail Width Without GRF Cut**	The minimum width, at the narrowest point, for any stile or rail with hinge boring, without a "GRF" cut, is 1¾" [44.5mm] when using Cup Boring Distances of -5mm, 2mm, 2.5mm, 3mm, 4mm, 5mm or 6mm.
		The minimum width, at the narrowest point, for any stile or rail with hinge boring, without a "GRF" cut, is 2" [50.8] when using Cup Boring Distances of 7mm or 8mm.
4	**Minimum Stile & Rail Width With GRF Cut**	The minimum width, at the narrowest point, for any stile or rail with hinge boring & a "GRF" cut, is 2" [50.8mm] when using Cup Boring Distances of -5mm, 2mm, 2.5mm, 3mm, 4mm or 5mm.
		The minimum width, at the narrowest point, for any stile or rail with hinge boring & a "GRF" cut, is 2¼" [57.2mm] when using Cup Boring Distances of 6mm, 7mm or 8mm.

▶ **For PRICING** ▶ *See Section **F.1*** in our current Wholesale Pricing Catalog.

F

Demountable Hinge Slot

SP100 — Section Views & Back Views of SP100

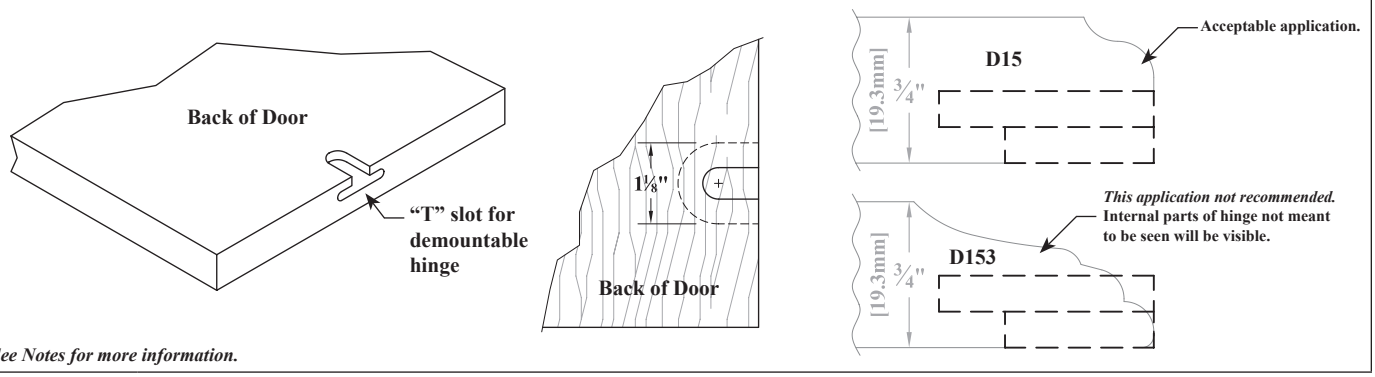

See Notes for more information.

Knife Hinge Slot / Dado Blade Slot

DBS101 — Section View & Back View of DBS101

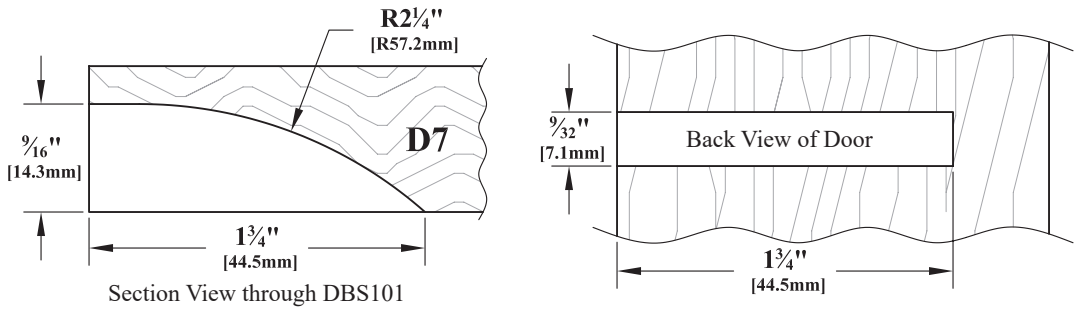

Section View through DBS101

DBS102 — Section View Through DBS102

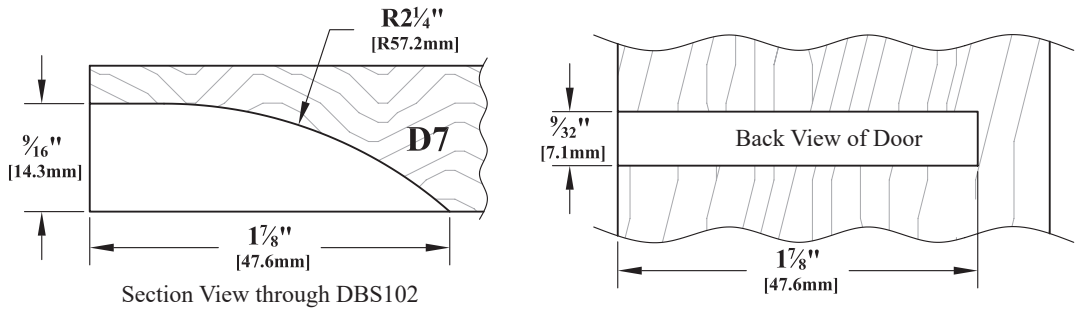

Section View through DBS102

DBS103 — Section View Through DBS103

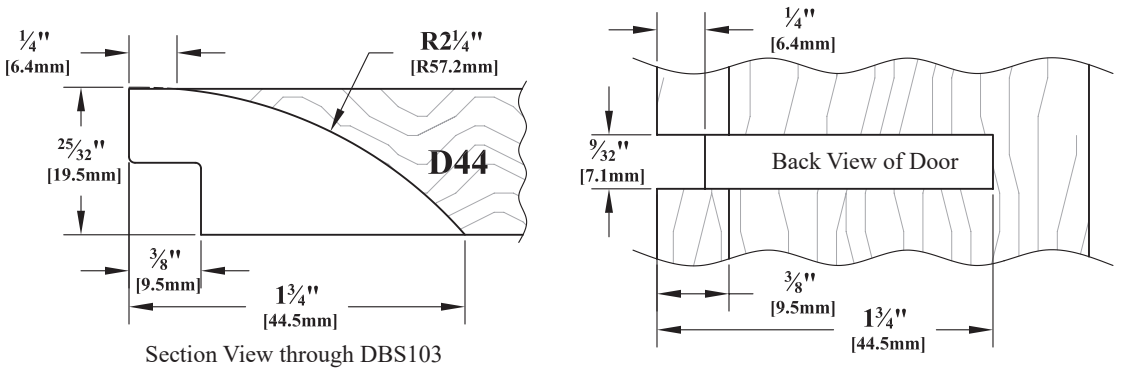

Section View through DBS103

▶ **For PRICING** ▶ *See Section **F.1*** in our current Wholesale Pricing Catalog.

Ordering & Pricing Notes: Hinge Slots (Demountable & Knife)		
Ordering Guidelines		
1	**Order Forms**	Applicable order forms will include spaces to indicate your chosen option.
Pricing		
1	**Pricing**	Please see ***Section F.1*** of our current **Wholesale Pricing Catalog**.

Technical Notes: Hinge Slots (Demountable & Knife)		
Cabinet Door & Drawer Front Options (Chapter B, V)		
1	**Demountable & Knife Hinge Slot**	Available on all doors, including raw MDF and doors with 3D Laminate (RTF).

Functional Options (Chapter F)		
1	**Demountable Hinge Slot**	Available in the following patterns: **SP100**.
2	**Knife Hinge Slot**	Available in the following patterns: **DBS101**, **DBS102** and **DBS103**.

Profile Options (Chapter E)		
1	**Demountable Hinge Slot**	WalzCraft has the ability to apply the **SP100** in conjunction with all of our outside edge profiles. However, not all profile/demountable hinge combinations are compatible, as there are numerous types of demountable hinges available from hardware suppliers that require different slot configurations. It will be the customer's responsibility to confirm compatibility between the **SP100**, outside edge profile and demountable hinge. You can view compatibility drawings on our website to see how the **SP100** interacts with your chosen outside edge profile: ***WalzCraft.com > Resources > Technical Information > Compatibility Charts***.
2	**Knife Hinge Slot / Dado Blade Slot**	Please reference the ***Outside Edge Profile Compatibility*** chart on our website under **Resources / Technical Information** for compatible outside edge profiles.
		When using the **DBS101** or **DBS102** with certain outside edge profiles, the hinge will be visible from the face of the door. Please reference the ***Outside Edge Profile Compatibility*** chart on our website under **Resources / Technical Information** for which edges result in the hinge being visible (or not visible) from the face.

Sizes / Dimensions		
1	**Hinge Slot Placement**	Please see end of section for standard slot placement and quantity based on door height/width.
2	**Demountable Hinge Slot**	Stile or rail widths narrower than 1¾" [44.5mm] cannot be slotted.
3	**Knife Hinge Slot**	The **DBS102** requires a stile or rail width of at least 1⅞" [47.6mm].
		Stile or rail widths narrower than 1¾" [44.5mm] cannot be slotted.

F

▶ **For PRICING** ▶ *See Section **F.1*** in our current Wholesale Pricing Catalog.

F

Hinge Rout for SOSS Hinge #204 - HRS204 (Hinge Not Included)

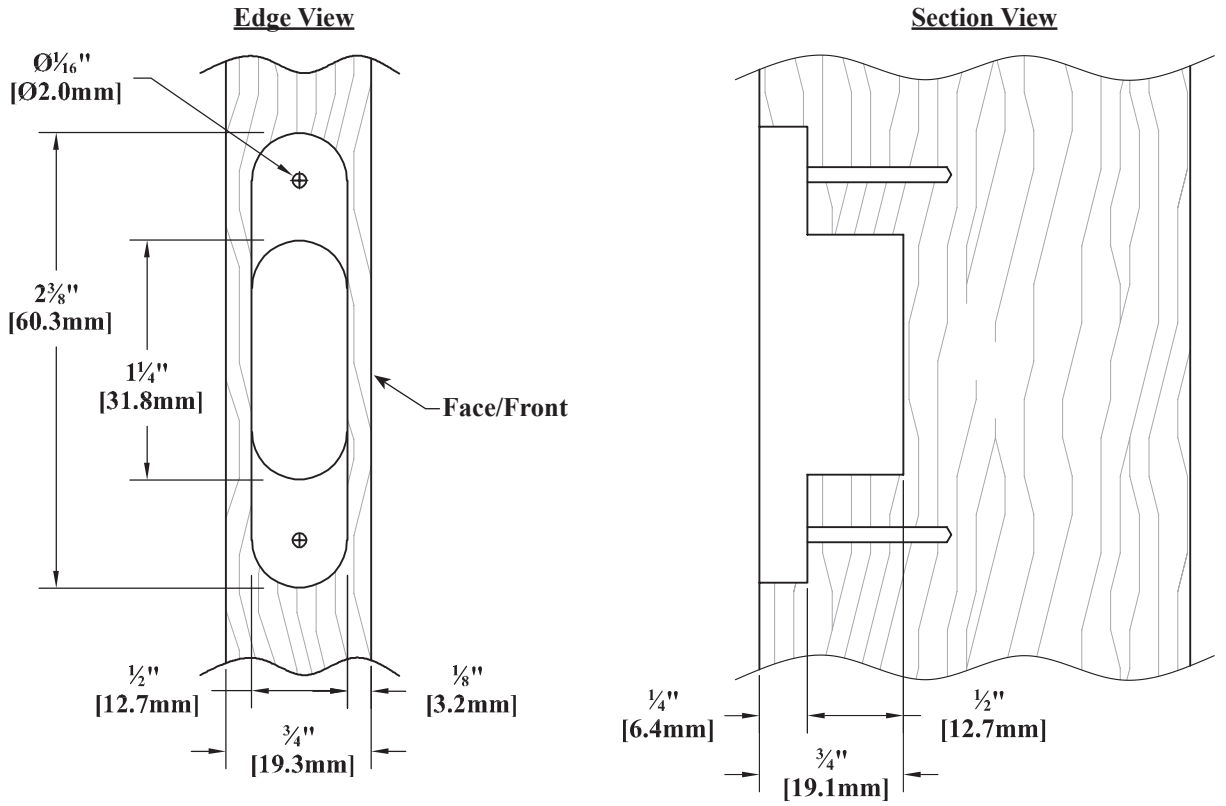

Ordering & Pricing Notes: Hinge Rout for SOSS Hinge #204		
		Ordering Guidelines
1	**Order Forms**	Applicable order forms will include spaces to indicate your chosen option.
		Pricing
1	**Pricing**	Please see ***Section F.1*** of our current **Wholesale Pricing Catalog**.

Technical Notes: Hinge Rout for SOSS Hinge #204		
		Functional Options (Chapter F)
1	**HRS204**	Hinge rout for SOSS Hinge #204 (Hinge rout only, does not include hinge). Please note that each hinge requires two routs for connecting one part to another.
		Material Options
1	**Material**	Available with solid wood, 1-Piece MDF and 5-Piece MDF products, ***not available*** with 3D Laminate/RTF.
		Profile Options (Chapter E)
1	**Outside Edge Profiles**	Only available with the following outside edge profiles: **D7, D33, D61, D66, D127, D145, D147.**
		Sizes / Dimensions
1	**Sizes**	**Thickness:** Minimum part thickness of ¾" [19.1mm]. Maximum part thickness of 2" [50.8mm].
		Width: Minimum part width of 2¼" [57.2mm] to accept depth of hinge.
2	**Hinge Rout Placement**	Please see end of section for standard rout placement and quantity based on door height/width.

▶ **For PRICING** ▶ *See Section **F.1*** in our current Wholesale Pricing Catalog.

Standard Hinge Bore, Slot and Rout Placement - Vertical Alignment

*** Measurements are to the center of the bore, rout or slot. ***

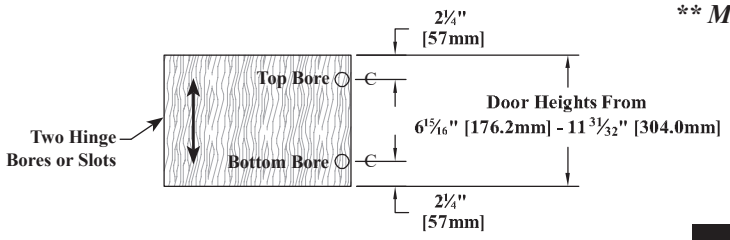

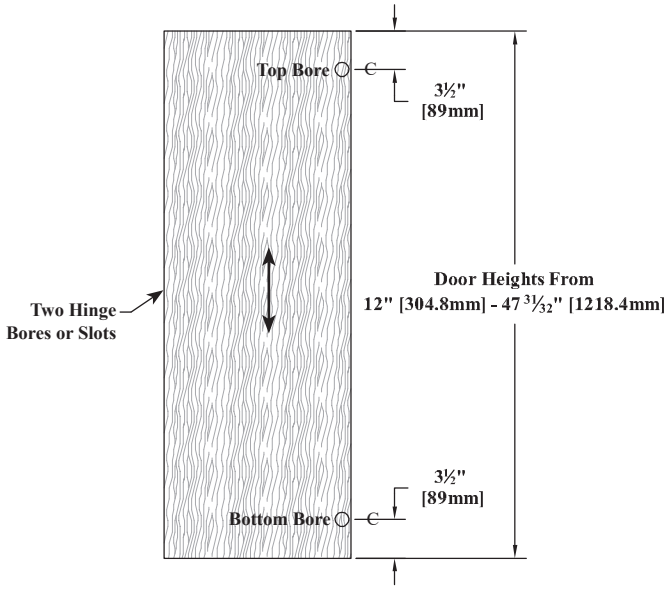

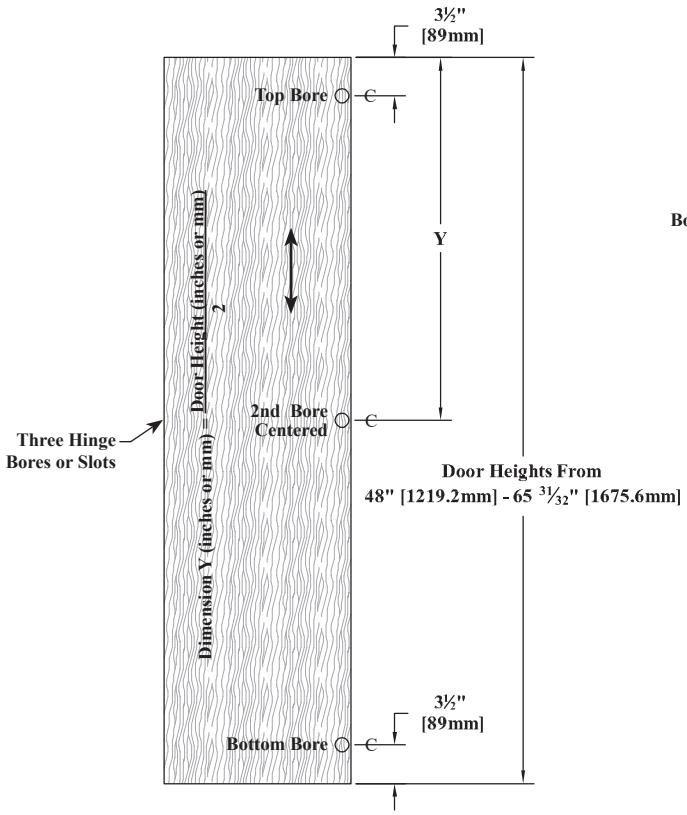

Bore, Rout, Slot Placement

Dimension X1 (mm) = $\left(\frac{\text{Door Height (mm)} - 178\text{mm}}{3}\right) + 89\text{mm}$

Dimension X1 (inches) = $\left(\frac{\text{Door Height (inches)} - 7''}{3}\right) + 3\tfrac{1}{2}''$

Dimension X2 (mm) = $\left(\frac{\text{Door Height (mm)} - 178\text{mm}}{3}\right) \times 2 + 89\text{mm}$

Dimension X2 (inches) = $\left(\frac{\text{Door Height (inches)} - 7''}{3}\right) \times 2 + 3\tfrac{1}{2}''$

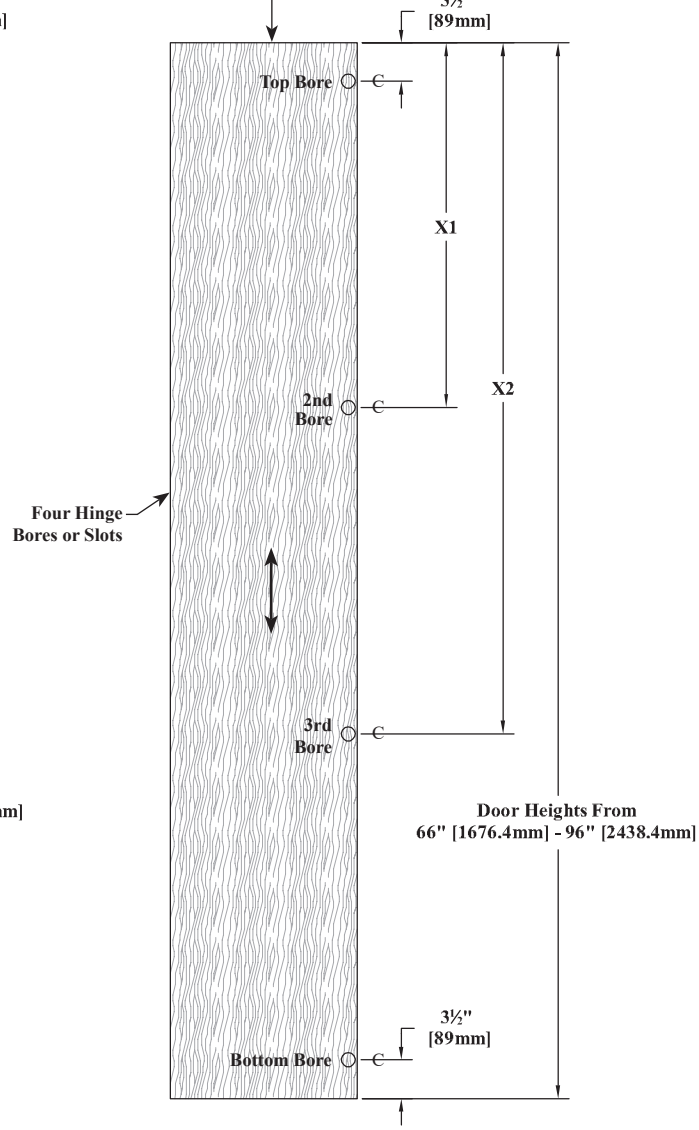

▶ **For PRICING** ▶ *See Section **F.1*** in our current Wholesale Pricing Catalog.

F

Standard Hinge Bore, Slot and Rout Placement - Horizontal Alignment (Flip-Up/Down Doors)

*** Measurements are to the center of the bore, rout or slot. ***

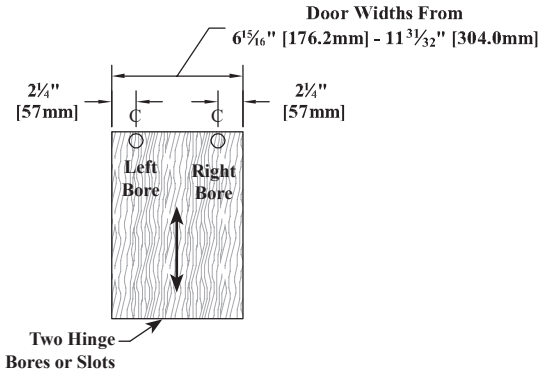

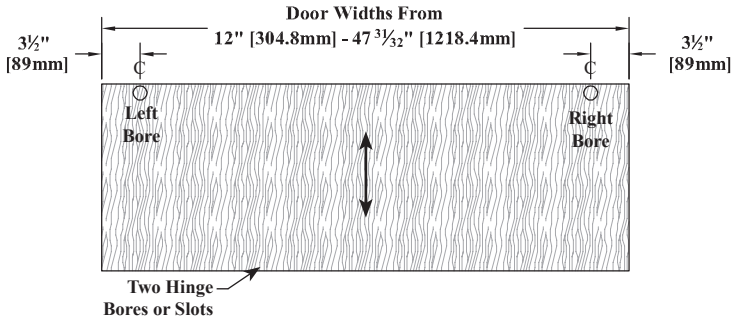

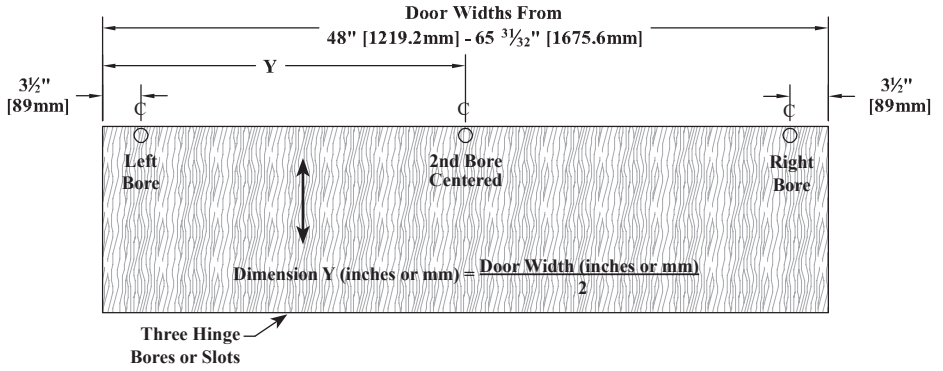

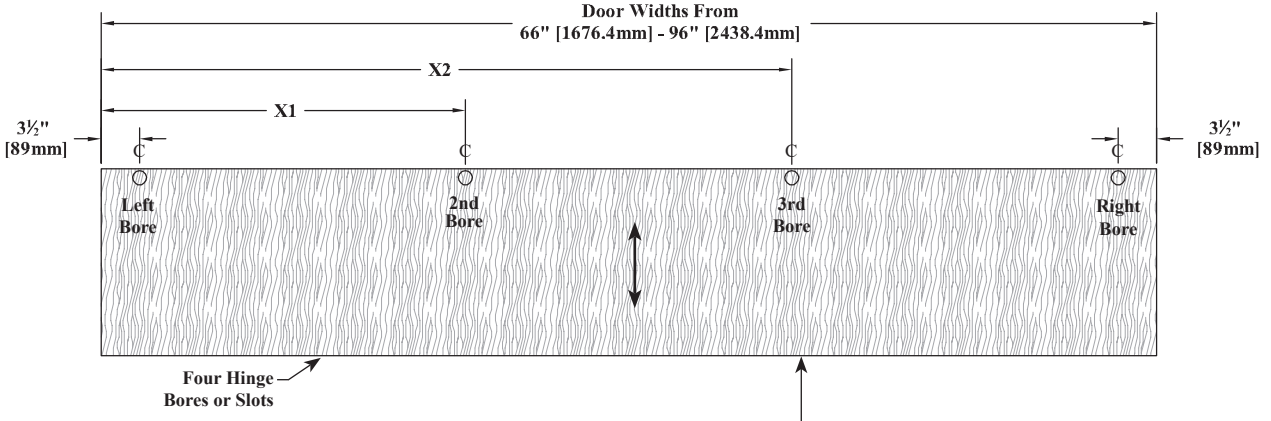

Bore, Slot, Rout Placement

$$\text{Dimension X1 (mm)} = \left(\frac{\text{Door Width (mm)} - 178\text{mm}}{3}\right) + 89\text{mm}$$

$$\text{Dimension X1 (inches)} = \left(\frac{\text{Door Width (inches)} - 7''}{3}\right) + 3\tfrac{1}{2}''$$

$$\text{Dimension X2 (mm)} = \left(\frac{\text{Door Width (mm)} - 178\text{mm}}{3}\right) \times 2 + 89\text{mm}$$

$$\text{Dimension X2 (inches)} = \left(\frac{\text{Door Width (inches)} - 7''}{3}\right) \times 2 + 3\tfrac{1}{2}''$$

▶ **For PRICING** ▶ *See Section **F.1*** in our current Wholesale Pricing Catalog.

Ordering & Pricing Notes: Standard Hinge Bore, Slot and Rout Placement		
	Ordering Guidelines	
1	**Order Forms**	Applicable order forms will include spaces to indicate your chosen option.
	Pricing	
1	**Pricing**	Please see ***Section F.1*** of our current **Wholesale Pricing Catalog**.

Technical Notes: Standard Hinge Bore, Slot and Rout Placement		
	General Information (Chapter A)	
1	**Grain Direction**	Arrows (←→)shown indicate standard grain direction. Grain direction may be specified at **NO** additional cost.
	Miscellaneous	
1	**Additional Bores**	You may add additional bores, slots or routs.
2	**Matching Drill Bit**	A drill bit to match, using a 35mm diameter, is available for purchase at www.Woodcraft.com. You may also reach them at: **1-800-225-1153. Part #142511**.
	Sizes / Dimensions	
1	**Placement**	Standard bore, slot and rout locations and the number per door are shown in the drawings on the previous pages.
		Vertical Alignment • Bore, rout and slot locations are measured from the top of the door to the center of each bore, rout or slot except for the bottom bore, rout or slot which is measured from the bottom of the door to the center. • The number of bores are labeled from the top down as shown in the drawings (ie: Top bore, 2nd bore, 3rd bore, Bottom bore, etc.) • Minimum placement of 2" from top and/or bottom of door.
		Horizontal Alignment • Bore, rout and slot locations are measured from the left edge of the door to the center of each bore, rout or slot except for the right bore, rout or slot which is measured from the right edge of the door to the center. • The number of bores are labeled from left to right as shown in the drawings (ie: Left bore, 2nd bore, 3rd bore, Right bore, etc.). • Minimum placement of 2" from left and/or right of door.
		You may specify custom quantities and/or locations for hinge bores, slots and routs.

▶ **For PRICING** ▶ *See Section **F.1*** in our current Wholesale Pricing Catalog.

F

"Outside Corner" Joinery Options

MJ1 — 45° "Outside Corner" (22½° Miter Cut)

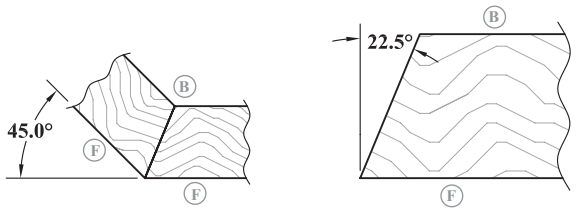

MJ3 — 90° "Outside Corner" (45° Miter Cut)

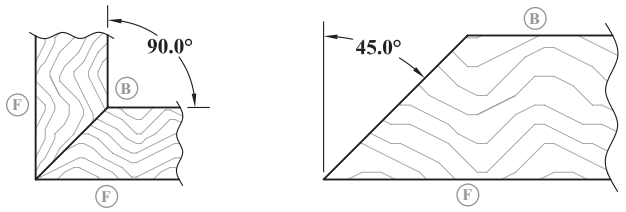

MJ40 — 90° "Outside Corner" (45° Miter Cut)

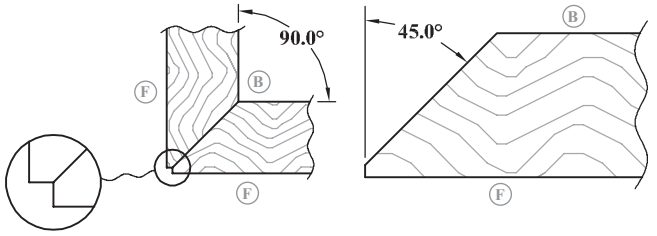

MJ10 — 90° "Outside Corner" (Dado Option)

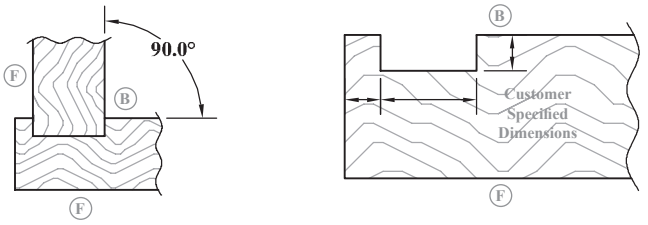

MJ11 — 22½° "Outside Corner" (22½° Dado Option)

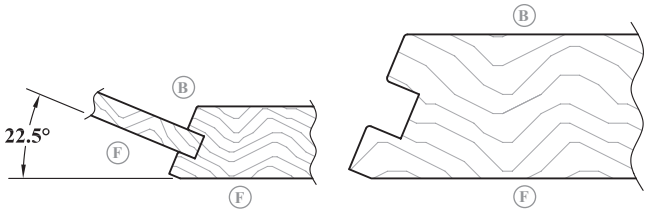

"Inside Corner" Joinery Options

MJ2 — 45° "Inside Corner" (22½° Miter Cut)

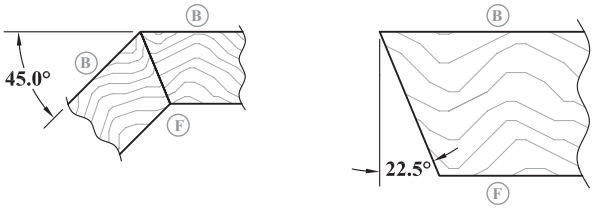

MJ4 — 90° "Inside Corner" (45° Miter Cut)

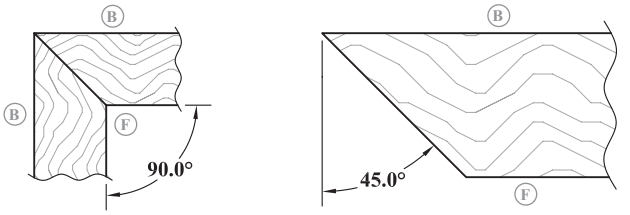

MJ5 — 90° "Inside Corner" (45° Miter Cut)

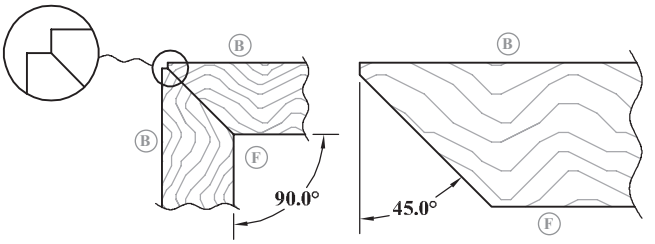

MJ18 — 90° "Inside Corner" (Dado Option)

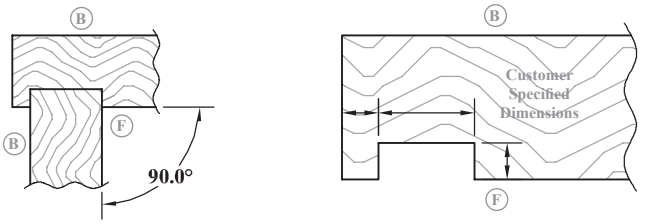

MJ19 — 22½° "Inside Corner" (22½° Dado Option)

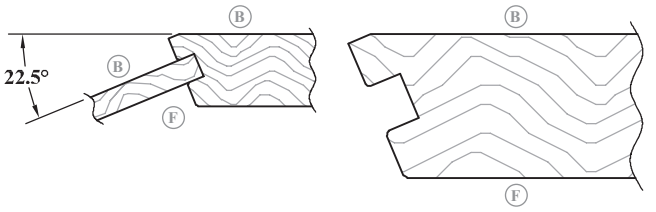

(F) = Face/Front (B) = Back ◇M = Male ◇F = Female

▶ **For PRICING** ▶ *See Section **F.2*** in our current Wholesale Pricing Catalog.

"Outside Corner" Joinery Options

MJ12 — 45° "Outside Corner" (45° Dado Option)

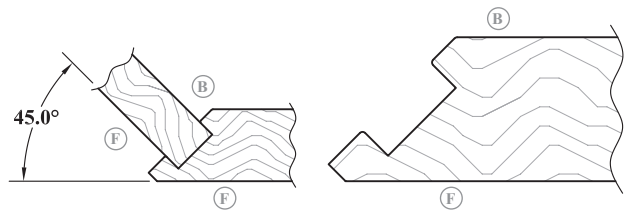

MJ13 — 90° "Outside Corner" (Rabbet Option)

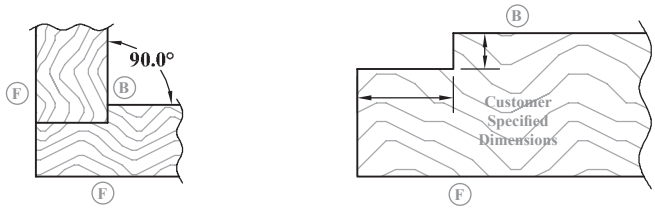

MJ14 — 22½° "Outside Corner" (22½° Rabbet Option)

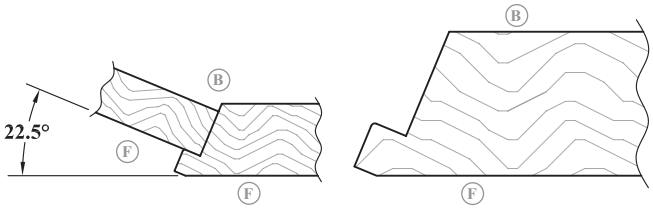

MJ15 — 45° "Outside Corner" (45° Rabbet Option)

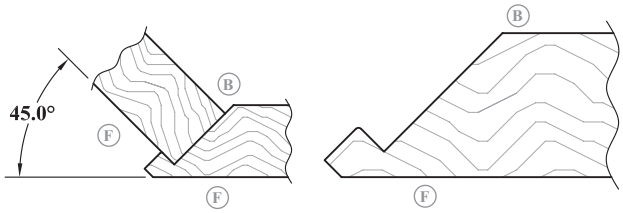

MJ16 — 45° "Outside Corner" (45° Rabbet Option)

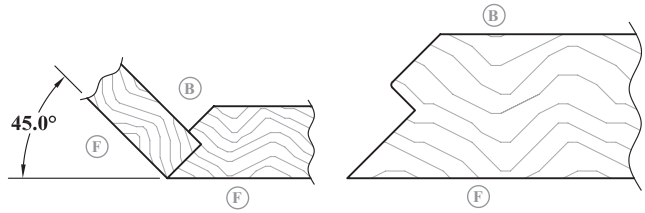

"Inside Corner" Joinery Options

MJ20 — 45° "Inside Corner" (45° Dado Option)

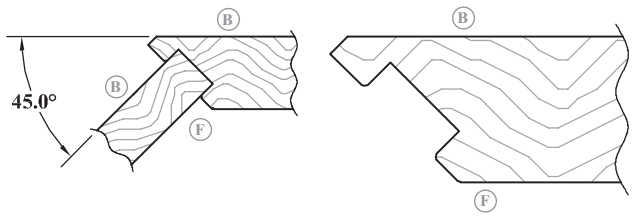

MJ21 — 90° "Inside Corner" (Rabbet Option)

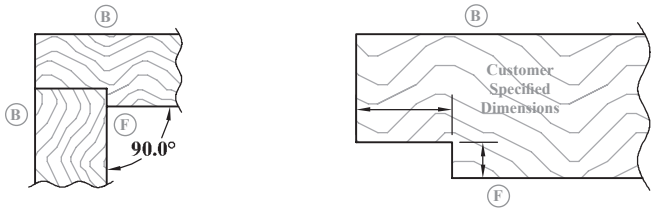

MJ22 — 22½° "Inside Corner" (22½° Rabbet Option)

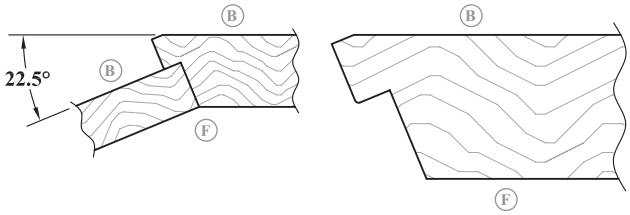

MJ23 — 45° "Inside Corner" (45° Rabbet Option)

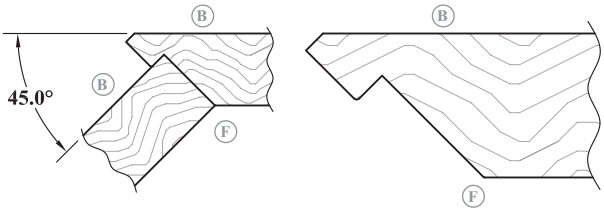

MJ24 — 45° "Inside Corner" (45° Rabbet Option)

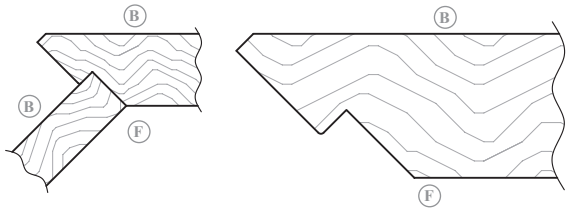

F = Face/Front B = Back M = Male F = Female

▶ **For PRICING** ▶ *See Section **F.2*** in our current Wholesale Pricing Catalog.

F

"Outside Corner" Joinery Options

MJ17 — 90° "Outside Corner" (90° Rabbet Option)

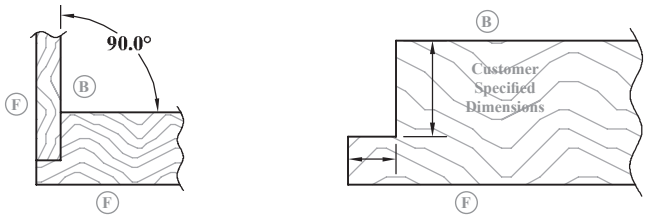

"Inside Corner" Joinery Options

MJ25 — 90° "Inside Corner" (90° Rabbet Option)

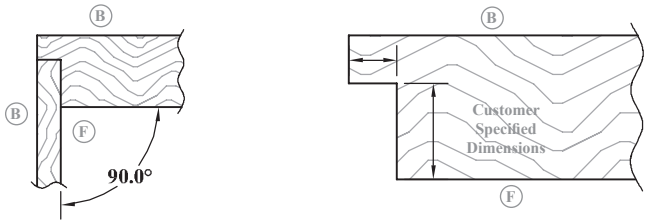

"Tongue & Groove" Joinery Options

MJ26-M & MJ26-F — Tongue & Groove (Edge to Edge)

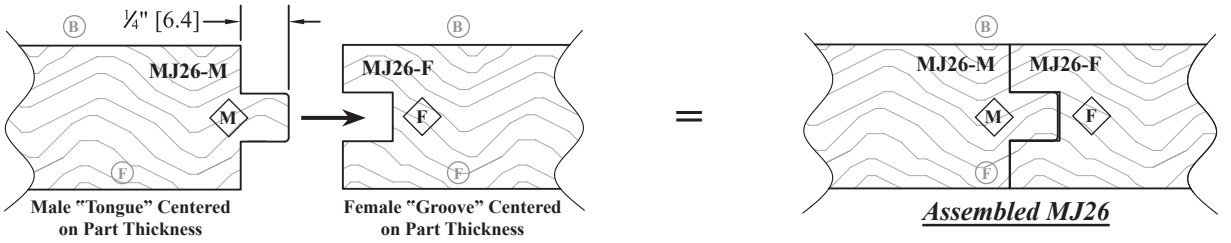

MJ27-M & MJ27-F — Tongue & Groove (Edge to Edge)

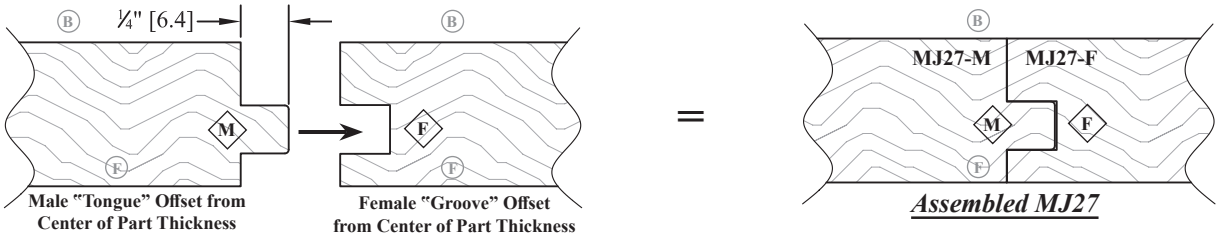

MJ28-M & MJ28-F — 90° "Outside Corner" - Tongue & Groove (Edge to Face)

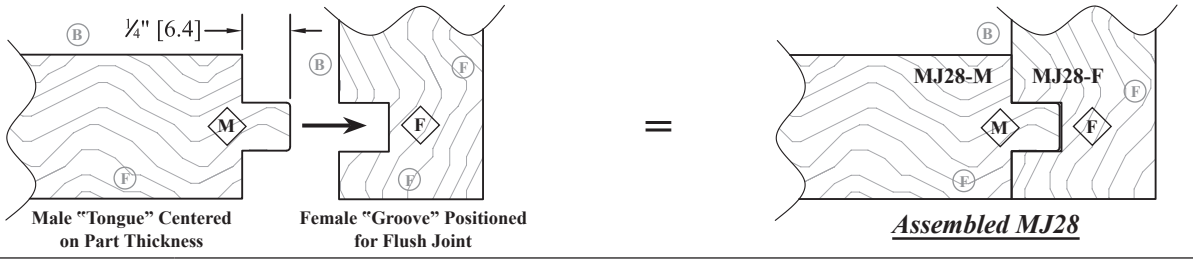

MJ29-M & MJ29-F — 90° "Outside Corner" - Tongue & Groove (Edge to Face)

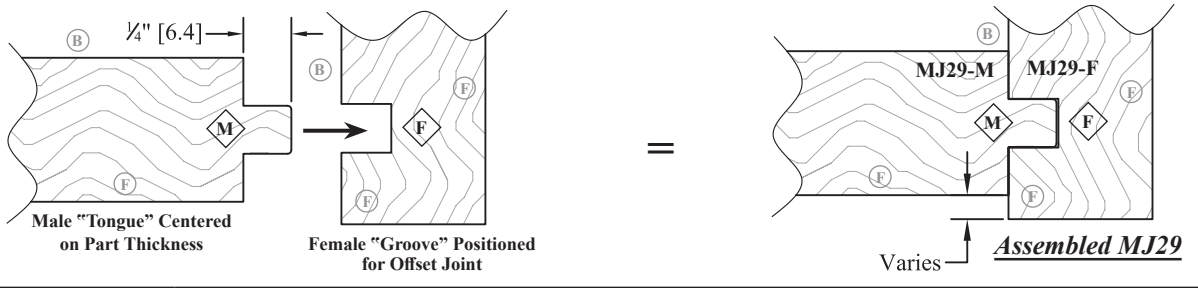

(F) = Face/Front (B) = Back (M) = Male (F) = Female

▶ For PRICING ▶ *See Section **F.2*** in our current Wholesale Pricing Catalog.

MJ41-M & MJ41-F — Cabinet Side to Face Frame Joint

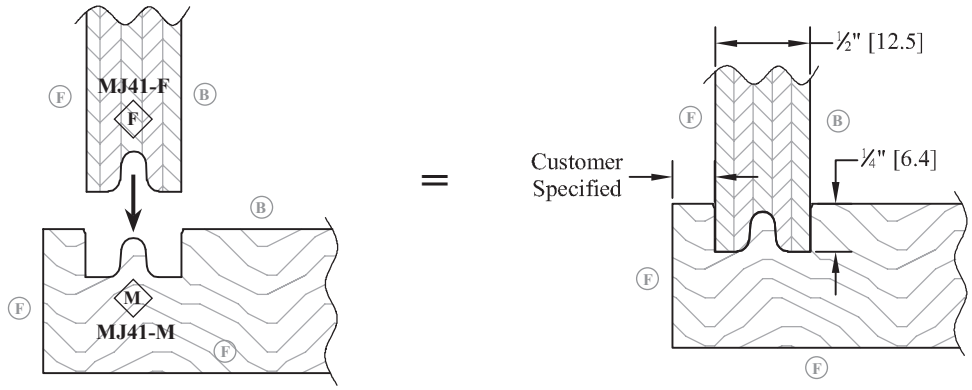

MJ42-M & MJ42-F — Cabinet Side to Face Frame Joint (45° Corner Cabinet)

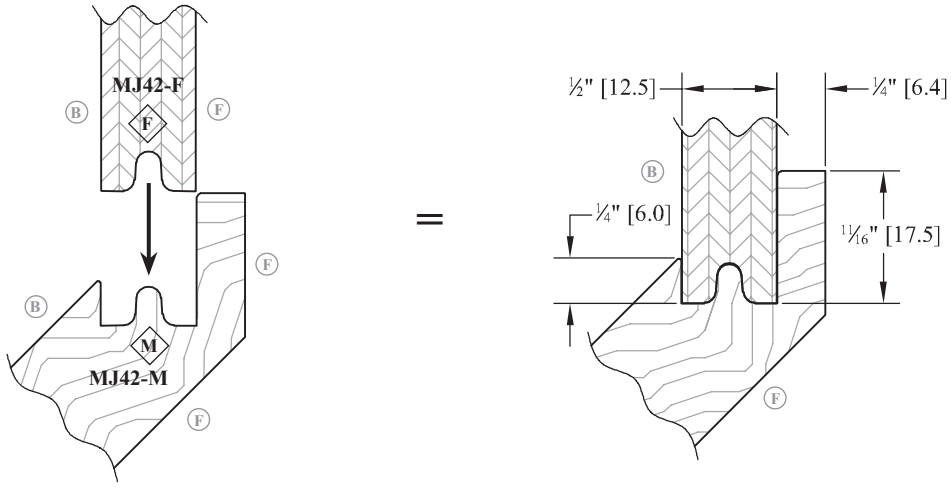

MJ41 & MJ42 — Application - 45° Corner Cabinet Installed Next to Straight Cabinet

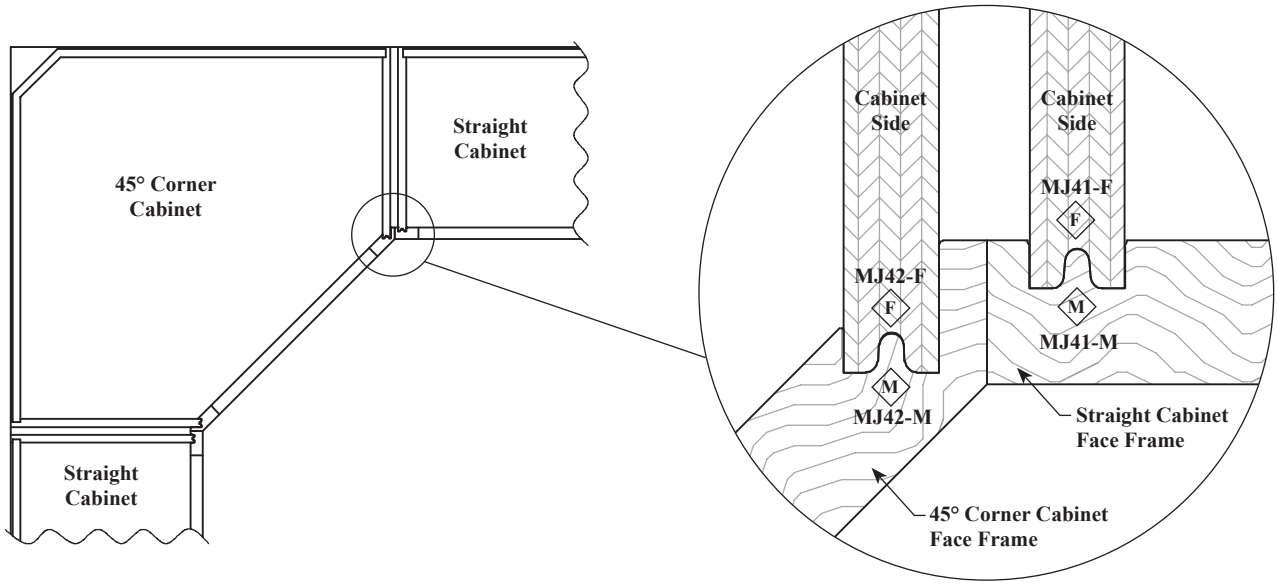

F = Face/Front B = Back M = Male F = Female

▶ For PRICING ▶ *See Section **F.2*** in our current Wholesale Pricing Catalog.

F

MJ46-M & MJ46-F — *Tongue & Groove (Edge to Edge)*

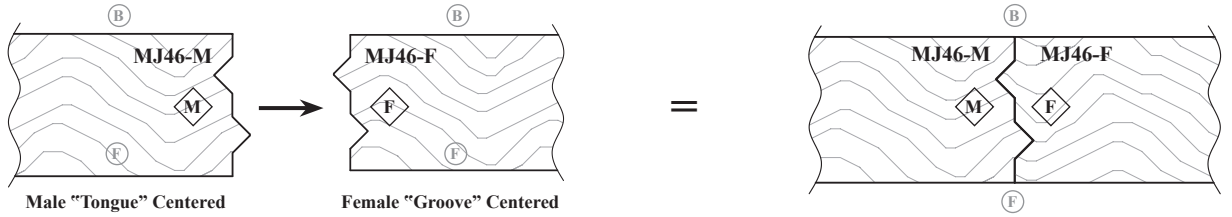

Male "Tongue" Centered on Part Thickness

Female "Groove" Centered on Part Thickness

Assembled MJ46

MJ47-M & MJ47-F — *45° "Inside Corner" - Tongue & Groove (Edge to Edge - 22½° Miter Cut)*

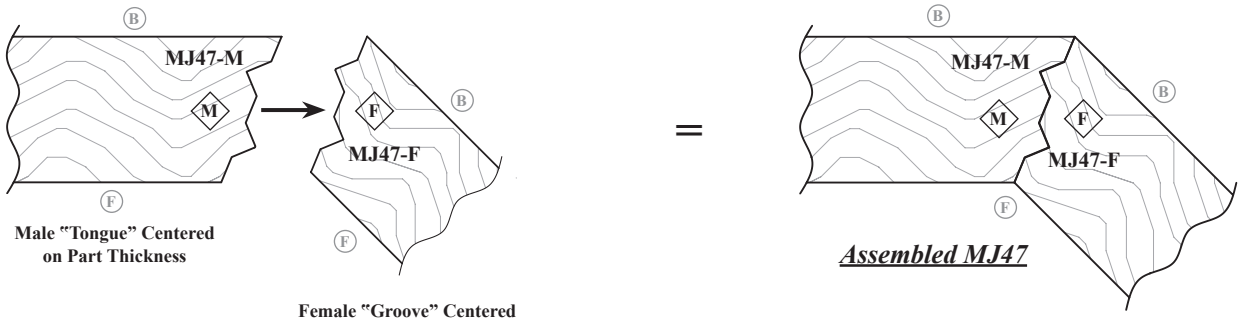

Male "Tongue" Centered on Part Thickness

Female "Groove" Centered on Part Thickness

Assembled MJ47

MJ49-M & MJ49-F — *45° "Outside Corner" - Tongue & Groove (Edge to Edge - 22½° Miter Cut)*

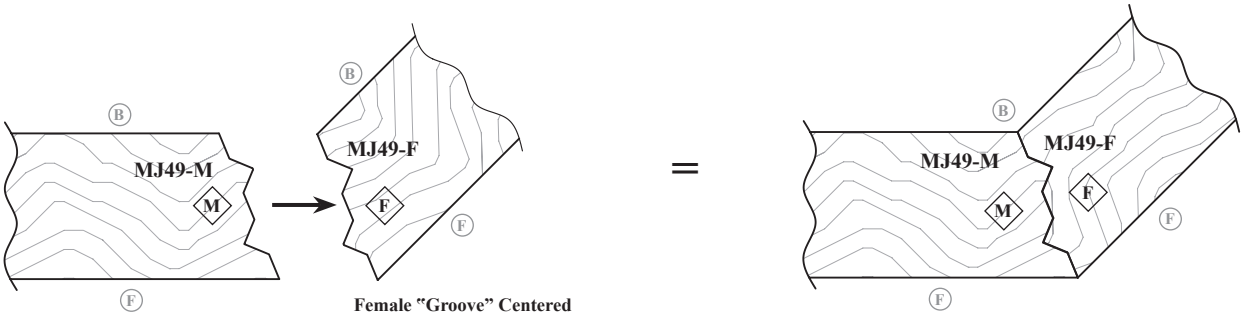

Male "Tongue" Centered on Part Thickness

Female "Groove" Centered on Part Thickness

Assembled MJ49

(F) = Face/Front (B) = Back ◇M = Male ◇F = Female

▶ **For PRICING** ▶ *See Section **F.2*** in our current Wholesale Pricing Catalog.

MJ48-M & MJ48-F — 90° "Inside Corner" - Tongue & Groove *(Edge to Edge - 45° Miter Cut)*

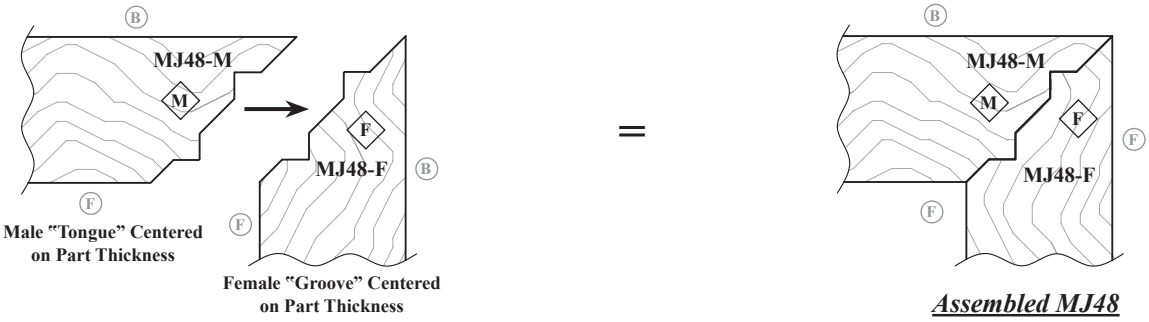

MJ50-M & MJ50-F — 90° "Outside Corner" - Tongue & Groove *(Edge to Edge - 45° Miter Cut)*

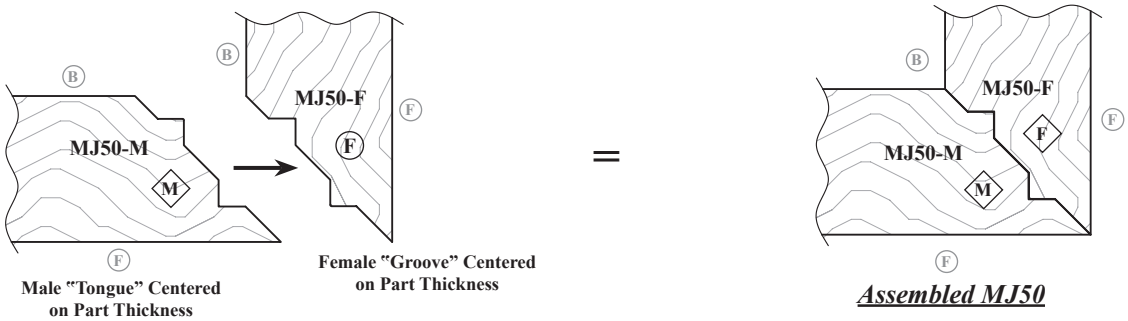

F = Face/Front B = Back M = Male F = Female

▶ **For PRICING** ▶ *See Section **F.2*** in our current Wholesale Pricing Catalog.

Ordering & Pricing Notes: Miscellaneous Joinery Options		
Ordering Guidelines		
1	**Order Forms**	Applicable order forms will include spaces to indicate your chosen option.
Pricing		
1	**Pricing**	Please see ***Section F.2*** of our current **Wholesale Pricing Catalog**.

Technical Notes: Miscellaneous Joinery Options		
Functional Options (Chapter F)		
1	**MJ1, MJ2, MJ3, MJ4, MJ5, MJ40**	When ordering any of these miter joinery options pre-finished with a SolidTone®, and utilizing the Dovetail Key Joint Assembly Method ***(Section F.3)***, the individual components must be assembled and sanded by WalzCraft prior to finishing.
2	**MJ10, MJ18**	Width, depth and placement of the dado groove must be specified.
		⅛" [3.2mm] minimum for placement from the outside edge, with a maximum depth of ½" [12.7mm].
3	**MJ11, MJ19**	Dado size is fixed at ¼"W x 3/16"D [6.4mm x 4.8mm]. Location is fixed at ¼" [6.4mm] from the face.
4	**MJ12, MJ20**	Width and depth of the dado groove must be specified.
		Select ¼" [6.4mm], ½" [12.7mm] or ⅝" [15.9mm] for the width.
		¼" [6.4mm] maximum for depth.
5	**MJ13, MJ17, MJ21,MJ25**	Width and depth of the rabbet groove must be specified.
		½" [12.7mm] maximum depth.
6	**MJ14**	Rabbet size is fixed at 19/32"W x 3/16"D [15.1mm x 4.8mm]. Location is fixed at ¼" [6.4mm] from the face.
7	**MJ15**	Rabbet size is fixed at ⅞"W x 3/16"D [22.2mm x 4.8mm]. Location is fixed at ¼" [6.4mm] from the face.
8	**MJ16**	Rabbet size is fixed at ½"W x 3/16"D [12.7mm x 4.8mm]. Location is fixed at ⅜" [9.5mm] from the back.
9	**MJ22**	Rabbet size is fixed at ½"W x 3/16"D [12.7mm x 4.8mm]. Location is fixed at 11/32" [8.7mm] from the back.
10	**MJ23**	Rabbet size is fixed at ¾"W x 3/16"D [19.1mm x 4.8mm]. Location is fixed at ⅜" [9.5mm] from the back.
11	**MJ24**	Rabbet size is fixed at ½"W x 3/16"D [12.7mm x 4.8mm]. Location is fixed at ⅝" [15.9mm] from the back.
12	**MJ26, MJ27, MJ28, MJ29**	Size and location of tongue and groove is fixed as shown.
		When ordering, please be sure to include the ¼" [6.4mm] tongue in the overall part size for **MJ26-M, MJ27-M, MJ28-M** and **MJ29-M.**
13	**MJ41-M, MJ41-F, MJ42-M, MJ42-F**	The **MJ41-F** and **MJ42-F** can only be applied to ½" [12.7mm] thick material supplied by WalzCraft. Please see ***Section K.1*** for options.
		The tenon/tongue on the **MJ41-M** and **MJ42-M** will always be centered within the ½" [12.7mm] wide groove.
14	**MJ46, MJ47, MJ48, MJ49, MJ50**	Size and location of tongue and groove is fixed as shown.
		When ordering the **MJ46M**, please be sure to include the 1/16" [1.6mm] tongue in the overall part size.
15	**Miter Joints for 45° and 90° Corners**	WalzCraft's preferred method for assembling 45° and 90° miter joints is to utilize miscellaneous joinery options **MJ47, MJ48, MJ49** and **MJ50**.

Miscellaneous		
1	**Assembled Products with Joinery Options**	The joinery options shown in this section can also be applied to assembled products such as doors and drawer fronts, as well as assembled face frames and fluted moldings. • Note: When applying an **MJ** option to one or more edges of a door/drawer front, you must also indicate a **D7** outside edge profile for that particular edge of the door/drawer front.
		Please submit drawings, inquiries and requests for customized joinery options to our Customer Support Team by fax at 1-608-781-3667 or email at: **customersupport@WalzCraft.com**.
		Additional charges may be applied to assemble customized configurations where more than one item and/or product is conjoined with another by WalzCraft.
		We reserve the right to decline requests for quotations or orders, based on our capabilities and/or current capacities.

▶ **For PRICING** ▶ *See Section **F.2*** in our current Wholesale Pricing Catalog.

F

JAM1 Dovetail Key - Joint Assembly Method

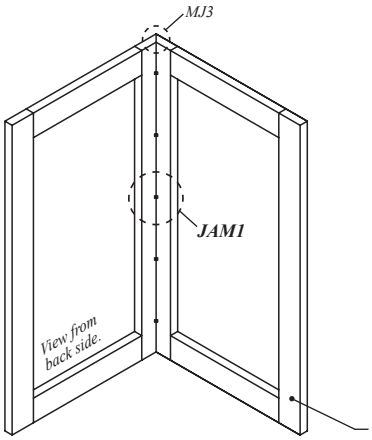

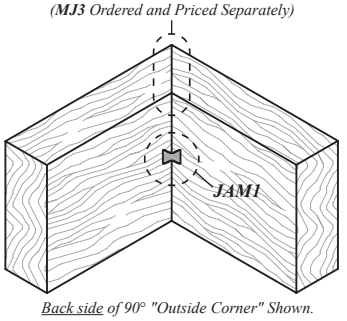

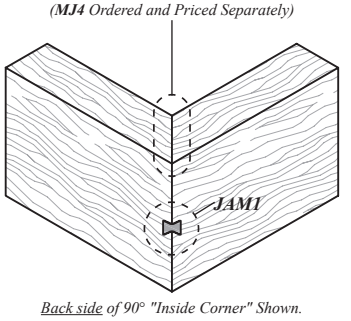

*Example of joining two face frames together for an "Outside Corner" application utilizing **JAM1 (Dovetail Key)** and MJ3.*

JAM2 Domino Tenon (Butt) - Joint Assembly Method

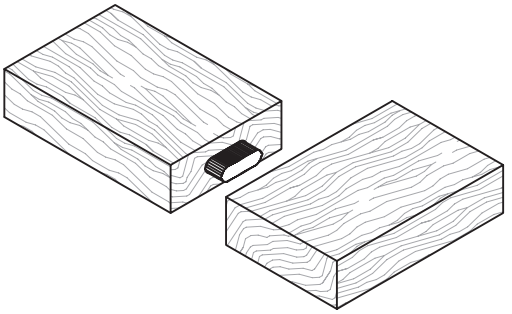

JAM7 Domino Tenon (Miter) - Joint Assembly Method

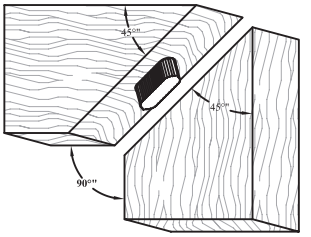

JAM3 Dowel - Joint Assembly Method

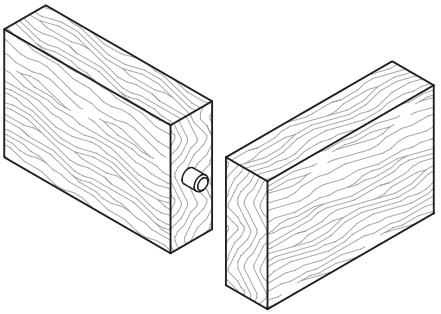

JAM4 Biscuit - Joint Assembly Method

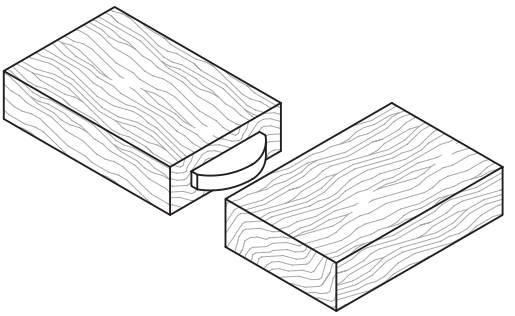

JAM5 Pocket Screw - Joint Assembly Method

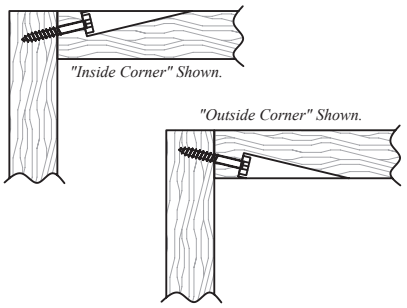

JAM6 Countersunk Screw - Joint Assembly Method

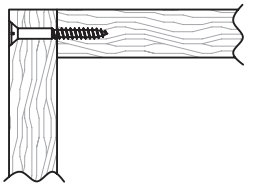

JAM8 Pin Nail - Joint Assembly Method

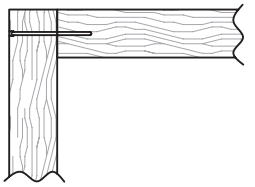

▶ **For PRICING** ▶ *See Section **F.3*** in our current Wholesale Pricing Catalog.

Ordering & Pricing Notes: Joint Assembly Methods		
Ordering Guidelines		
1	**Order Forms**	Applicable order forms will include spaces to indicate your chosen option.
2	**Ordering Guidelines**	Please provide WalzCraft with the following information: • The JAM option. • Identify the mating parts that are to receive the JAM option. • The location of the JAM option on the parts (i.e. Left Stile). • Indicate whether the mating parts are to be assembled by WalzCraft or sent RTA.
Pricing		
1	**Pricing**	Please see ***Section F.3*** of our current **Wholesale Pricing Catalog**.

Technical Notes: Joint Assembly Methods		
Functional Options (Chapter F)		
1	**Assembly Methods**	Joint Assembly Methods allow for easy component assembly, either on site or in your shop.
		WalzCraft can assemble components for certain SolidTone® applications. • Please submit your requests for assembly by WalzCraft to our Customer Support Team.
2	**JAM1 - Dovetail Key**	This dovetail key assembly method eliminates the clamping process, as dovetail keys are designed to provide the correct clamping pressure for proper glue joint. • Dovetail notches are routed into the parts using a dovetail routing machine. • Glue is then applied to the mating surfaces and conjoined. • Dovetail keys are inserted and driven into the material with a hammer, resulting in a perfectly aligned joint. • No additional fasteners are needed, which reduces potential damage from improper placement of screws or nails. • Can be used for joints from 0° to 180°.
3	**Miter Joints for 45° and 90° Corners**	WalzCraft's preferred method for assembling 45° and 90° miter joints is to utilize miscellaneous joinery options **MJ47, MJ48, MJ49** and **MJ50**. See ***Section F.2*** for more information on miscellaneous joinery.
Miscellaneous		
1	**Fasteners**	Fasteners (Dovetail Key, Dowel, Screw, etc.) will be shipped loose unless parts are assembled by WalzCraft.
*****Please contact our Customer Support Team for more information*****		

Part/Joint Width per Number of Fasteners	1 Fastener	2 Fastener	3 Fastener
JAM1 (Dovetail Key)	N/A	¾" up to 5 31/32"	6" up to 11 31/32"
JAM2 (Domino Tenon - Butt)	¾" up to 1 31/32"	2" up to 5 31/32"	6" up to 11 31/32"
JAM3 (Dowel)	N/A	¾" up to 5 31/32"	6" up to 11 31/32"
JAM4 (Biscuit)	¾" up to 1 31/32"	2" up to 5 31/32"	6" up to 11 31/32"
JAM5 (Pocket Screw)	¾" up to 1 31/32"	2" up to 5 31/32"	6" up to 11 31/32"
JAM6 (Countersunk Screw)	¾" up to 1 31/32"	2" up to 5 31/32"	6" up to 11 31/32"
JAM7 (Domino Tenon - Miter)	¾" up to 1 31/32"	2" up to 5 31/32"	6" up to 11 31/32"
JAM8 (Pin Nail)	N/A	¾" up to 11 31/32"	12" up to 23 31/32"

• If joint is 12" wide or greater, add one fastener for every four inches.
• Please note that this chart is a general guideline. WalzCraft may add to or subtract from the total number of fasteners at our discretion.

▶ **For PRICING** ▶ *See Section **F.3*** in our current Wholesale Pricing Catalog.

Half Lap Edge

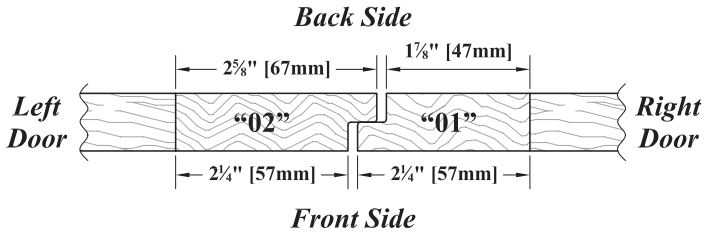

- **This view looks down at the top edge of your pair of doors as they are installed.**
- ***Please make note of the 2⅝" [66.7mm] right stile that is featured on the "O2L" door.***
- The rabbet cut on each door is approximately ⅜" [9.5mm] x ⅜" [9.5mm].

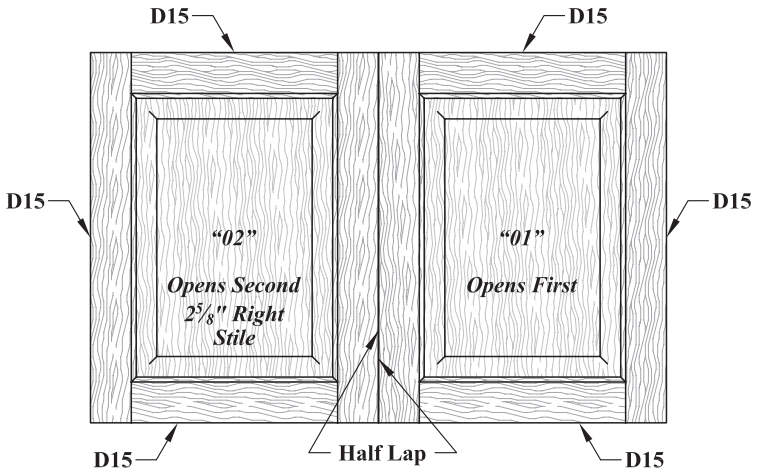

- **The view from the face of the doors does *not* reflect the fact that a Non-Standard part (*2⅝" [66.7mm] right stile*) was used on the "O2L" door, or that its overall width is actually ⅜" [9.5mm] wider than the "O1R" door.**

Ordering & Pricing Notes: Half Lap Edge

	Ordering Guidelines	
1	**Order Forms**	Please use "***Advanced Version***" of the ***Door Order Form (E•Z Form #2)***.
2	**Ordering Guidelines**	Half Lap doors are ordered as a pair and edged so that they fit together.
		A **D7** edge is needed on "Traditional" doors to apply the half lap edge.
		When ordering, please specify the following information: • Which door is to open first by designating it as "**01**"; this can be either the Right or Left door depending on your preference. The door that opens second should then be "**02**". • Add ⅜" [9.5mm] to the width of the stile that receives the Half Lap edge on the "**02**" door for a total stile width of 2⅝" [66.7mm]. • Add ⅜" [9.5mm] to the overall width of the "**02**" door. Adding ⅜" to the width of the stile that receives the Half Lap edge, and to the overall width of the "**02**" door, will maintain uniformity of the center panel size. As well, when the doors are closed, it appears that both stiles are the same size. This is demonstrated in the above illustration.
	Pricing	
1	**Pricing**	Please see ***Section F.4*** of our current **Wholesale Pricing Catalog**.

Technical Notes: Half Lap Edge

	Cabinet Door & Drawer Front Options (Chapter B)	
1	**Mitered Doors**	Custom modification is necessary for ***all*** doors constructed with Mitered joints when ordering with the Half Lap option. Additional design charges will be applied for this customization.
	Profile Options (Chapter E)	
1	**⅜" [9.5mm] Lipped Outside Edges**	Doors with a ⅜" [9.5mm] lipped outside edge also require custom modifications. Additional design charges will be applied for this customization.

▶ **For PRICING** ▶ *See Section **F.4*** in our current Wholesale Pricing Catalog.

Half Lap Molding

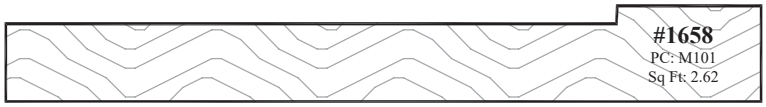

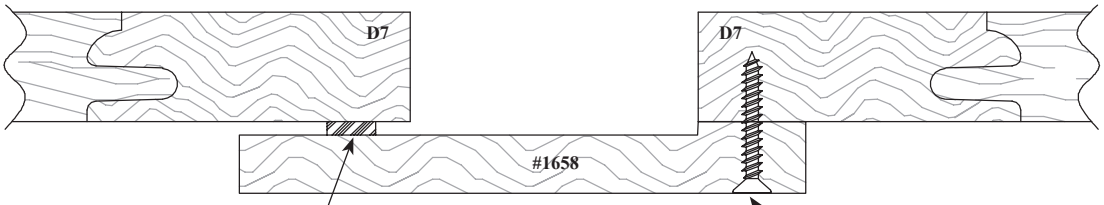

Rubber door bumper supplied by customer

Wood screw supplied by customer.

Application drawing not shown at full scale.

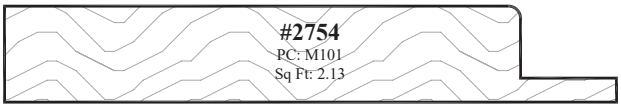

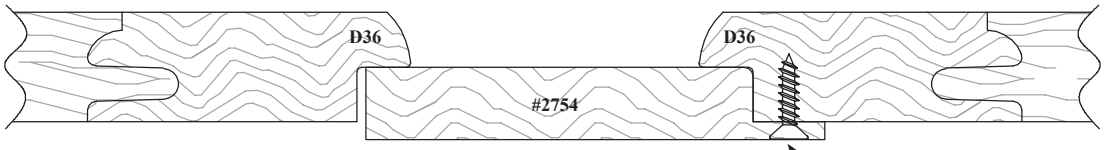

Wood screw supplied by customer.

Application drawing not shown at full scale.

#2884
PC: M101
Sq Ft: .72

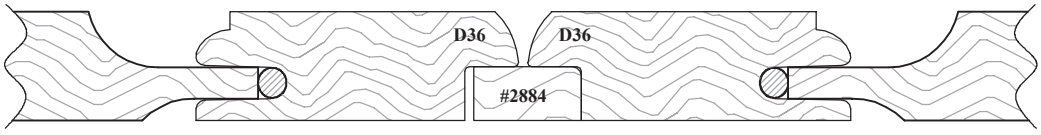

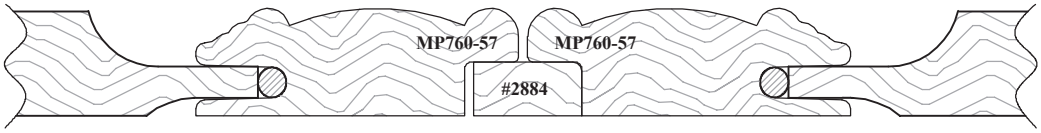

Half lap molding #2754 & #2884 designed for outside edge profiles with ⅜" x ⅜" [9.5mm x 9.5mm] dado on back.

Application drawing not shown at full scale.

▶ **For PRICING** ▶ *See Section **N.9*** in our current Wholesale Pricing Catalog.

F

Additional Outside Edge - Illustration 1

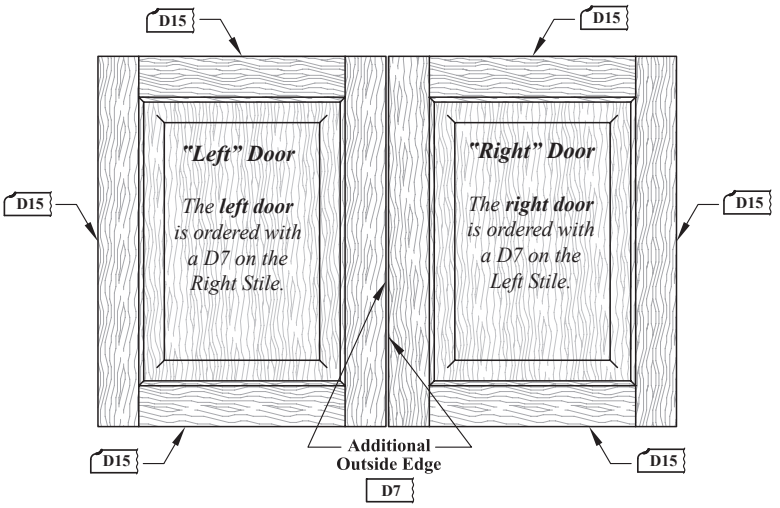

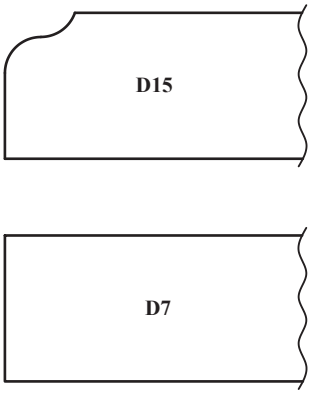

Additional Outside Edge - Illustration 2

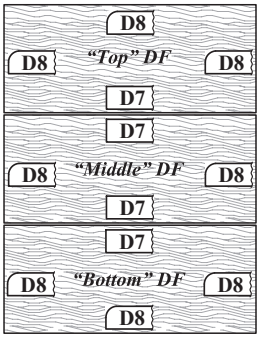

Bank of Drawer Fronts

(D7 is used where 2 drawer fronts meet.)

In this drawer front configuration a D8 edge is used in addition to a D7 edge where the drawer fronts meet or bump up against each other.

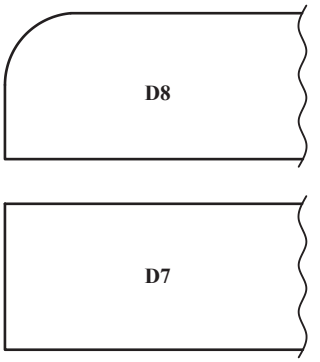

Additional Outside Edge - Illustration 3

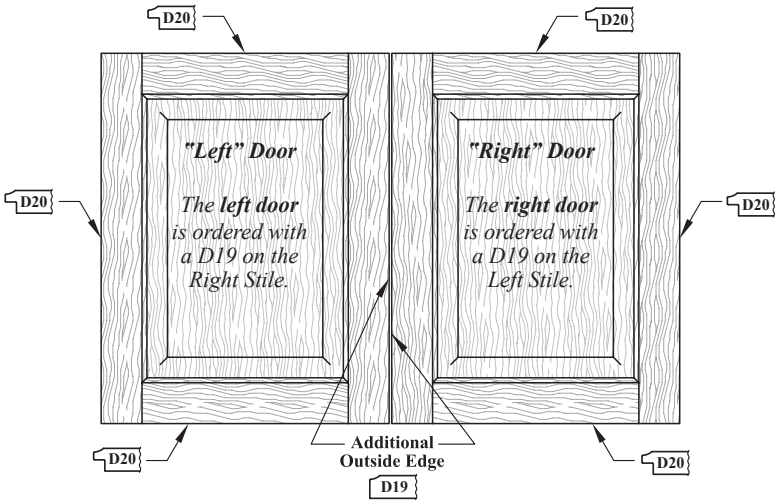

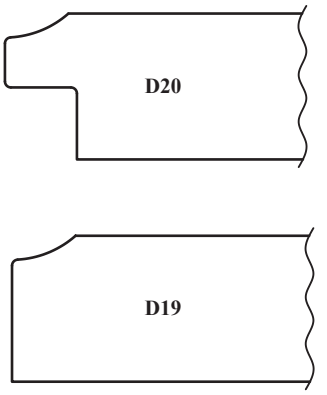

▶ **For PRICING** ▶ *See Section **F.5*** in our current Wholesale Pricing Catalog.

Ordering & Pricing Notes: Additional Outside Edge		
Ordering Guidelines		
1	**Order Forms**	Applicable order forms will include space to indicate your chosen option(s).
2	**Ordering Doors & Drawer Fronts with a D7 edge in Addition to *another* Outside Edge Profile**	**Illustration 1 Ordering Example:** • In the **Profile Info** box on the order form, list **D15** as the predominant **Outside Edge (OSE) Profile**. • In the **Additional OSE** column on your order form, list **D7** as the **OSE #** when the edge is to remain square. • Use one of the following **Location Codes** to indicate the placement of the **Additional OSE** on the door: ▪ **L = Left** ▪ **R = Right** ▪ **T = Top** ▪ **B = Bottom** • In the example on the previous page, the left door would note the **D7** location on the right and the right door would note the **D7** location on the left.
		Illustration 2 Ordering Example: • In the **Profile Info** box on the order form, list **D8** as the predominant **Outside Edge (OSE) Profile**. • In the **Additional OSE** column on your order form, list **D7** as the **OSE #** when the edge is to remain square. • Use one of the following **Location Codes** to indicate the placement of the **Additional OSE** on the DF: ▪ **L = Left** ▪ **R = Right** ▪ **T = Top** ▪ **B = Bottom** • In the example on the previous page, the top drawer front would note the **D7** location on the bottom. The middle drawer front would note the **D7** location on the top and bottom, and the bottom drawer front would note the **D7** location on the top.
3	**Ordering Doors or Drawer Fronts with *varying* OSE**	**Illustration 3 Ordering Example:** • In the **Profile Info** box on the order form, list **D20** as the predominant **Outside Edge (OSE) Profile**. • In the **Additional OSE** column on your order form, you would list **D19** as the **OSE #**. • Use one of the following **Location Codes** to indicate the placement of the **Additional OSE** on the door: ▪ **L = Left** ▪ **R = Right** ▪ **T = Top** ▪ **B = Bottom** • In the example on the previous page, the left door would note the **D19** location on the right and the right door would note the **D19** location on the left.
Pricing		
1	**Pricing**	Please see ***Section F.5*** of our current **Wholesale Pricing Catalog**.

Technical Notes: Additional Outside Edge		
Profile Options (Chapter E)		
1	**Outside Edge Profiles**	You may choose to use a different outside edge profile on each of the four sides (Left, Right, Top and Bottom) of your door or drawer front. Not available when using **ME** (Molder Edge) Outside Edge Profiles with the **MP600 / MP6000** Series Mitered Stile & Rail Profiles or when using the **MP700** Series Mitered Stile & Rail Profiles.
2	**D7 Edges**	If your configuration requires at least one edge to be left square (**D7**) where 2 doors meet, ***some*** may refer to the **D7** square edge as a "Butt" edge. ***WalzCraft "prefers" to simply state that these will have a D7 edge.***

▶ **For PRICING** ▶ *See Section **F.5*** in our current Wholesale Pricing Catalog.

Butt Joint with D7 Edge for Lazy Susan Doors

Butt Joint Detail

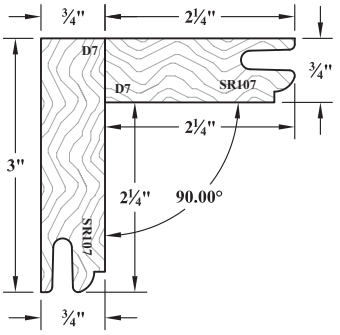

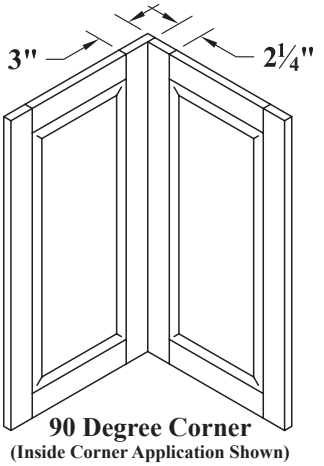

90 Degree Corner
(Inside Corner Application Shown)

Ordering & Pricing Notes: Butt Joint with D7 Outside Edge Profile		
		Ordering Guidelines
1	**Order Forms**	Applicable order forms will include spaces to indicate your chosen option(s).
		Pricing
1	**Pricing**	Please see ***Section F.6*** of our current **Wholesale Pricing Catalog**.

Technical Notes: Butt Joint with D7 Outside Edge Profile		
		Functional Options (Chapter F)
1	**Butt Joint Application**	With this method of application, one of the two lazy susan doors must be ordered with a 3" [76.2mm] wide stile and a **D7** edge on the side that goes into the corner. The other door is ordered with a standard 2¼" [57.2mm] wide stile and a **D7** edge on the side that attaches to the other door.
		This method allows you to join the two doors with a continuous hinge or screws.

45 Degree "Inside Corner" Miter Cut

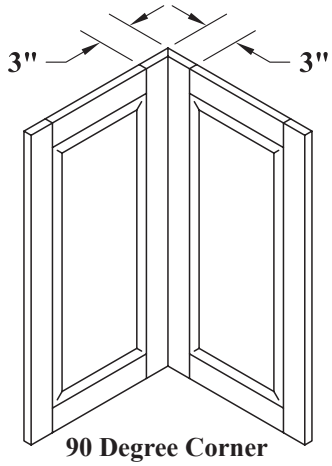

90 Degree Corner
(Inside Corner Application Shown)

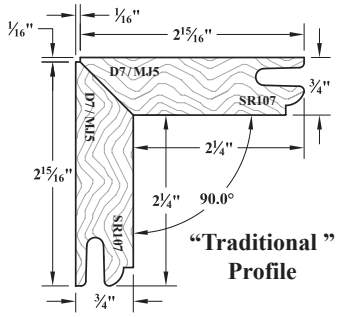

"Traditional" Profile

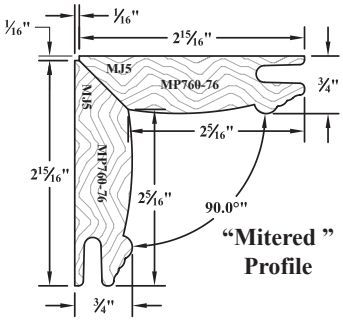

"Mitered" Profile

F

Ordering & Pricing Notes: 45° "Inside Corner" Miter Cut		
	Ordering Guidelines	
1	**Order Forms**	Applicable order forms will include spaces to indicate your chosen option(s).
2	**Ordering Information**	A **D7** edge is needed on "Traditional" doors to apply the 45° mitered edge.
		When ordering a 45° inside corner miter cut, it is recommended that you order each door with a 3" [76.2mm] wide stile on the mitered side to give a more balanced look.
		45° miter cuts are also available for doors with mitered stiles & rails that are 2¼" [57.2mm] wide or more. Adding a miter cut will change the visual appearance of the inside parts. See the mitered profile drawing above showing 3" [76.2mm] wide stiles & rails. An alternative assembly option would be the use of our Lazy Susan molding **#1345**, as demonstrated later in this section.
		Order both doors with Miscellaneous Joinery Option **MJ4** or **MJ5** (see ***Section F.2***). • **MJ4** and **MJ5** are compatible with the **MP700** series of mitered stile & rail profiles.
	Pricing	
1	**Pricing**	Please see ***Section F.6*** of our current **Wholesale Pricing Catalog**.

Technical Notes: 45° "Inside Corner" Miter Cut		
	Functional Options (Chapter F)	
1	**90° Inside Corner Application**	Two doors mitered at 45 degrees will result in a Lazy Susan door configuration with a 90° corner when assembled.
		All doors with the **MJ5** (45° Inside Corner Miter Cut) option will have a small 1/16" x 1/16" [1.6mm x 1.6mm] void at the rear of the door. The finished door size will be a 1/16" [1.6mm] smaller than the size you ordered. Once assembled, the doors will be the correct size and the inside corners will match up.

▶ **For PRICING** ▶ *See Section **F.6*** in our current Wholesale Pricing Catalog.

F

45° "Outside Corner" Miter Cut

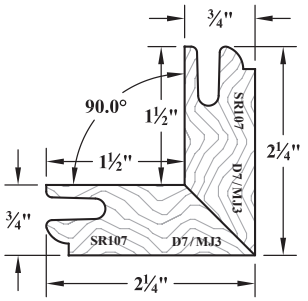

Ordering & Pricing Notes: 45° "Outside Corner" Miter Cut		
Ordering Guidelines		
1	**Order Forms**	Applicable order forms will include spaces to indicate your chosen option(s).
2	**Ordering Information**	A **D7** edge is needed on "Traditional" doors to apply the 45° mitered edge.
		A **45° Outside Corner Miter** option can be used in applications where a door or wainscot panel needs to cover an area requiring a 90° corner, or to customize fluted moldings to create-a-column.
		Order both doors with Miscellaneous Joinery Option **MJ3**, on ***page F.2.1.***
Pricing		
1	**Pricing**	Please see ***Section F.6*** of our current **Wholesale Pricing Catalog**.

Technical Notes: 45° "Outside Corner" Miter Cut		
Functional Options (Chapter F)		
1	**90° Outside Corner Application**	Two doors mitered at 45° will result in a door configuration with a 90° corner when assembled.
		An **Outside Corner** miter does not require the stile to be wider, because the material is taken off the back side.

▶ **For PRICING** ▶ *See Section **F.6*** in our current Wholesale Pricing Catalog.

90° Corner Molding for Lazy Susan Doors

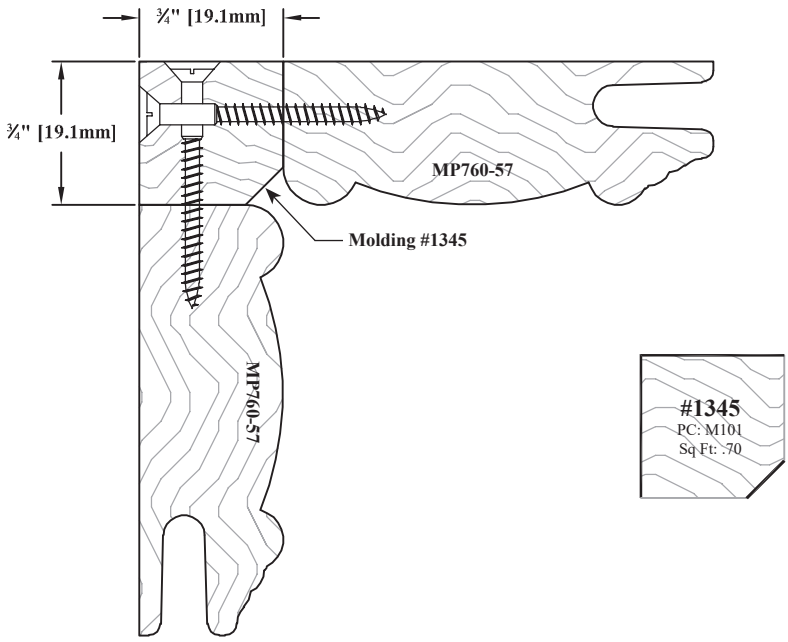

Ordering & Pricing Notes: 90° Corner Molding		
		Ordering Guidelines
1	**Order Forms**	Please use ***Molding & Miscellaneous Order Form (E•Z Form #5)***.
		Pricing
1	**Pricing**	Please see ***Section N.3 & N.12*** of our current **Wholesale Pricing Catalog**.

Technical Notes: 90° Corner Molding		
		Molding Options (Chapter N)
1	**Molding # 1345**	Molding is used to join two doors together at a 90° angle. Not compatible with all profiles.
		Sold in 8' lengths. ***See Section N.3.***

▶ **For PRICING** ▶ *See Section **F.6*** in our current Wholesale Pricing Catalog.

F

Hand Pull Rout Options - HR100, HR200, HR300

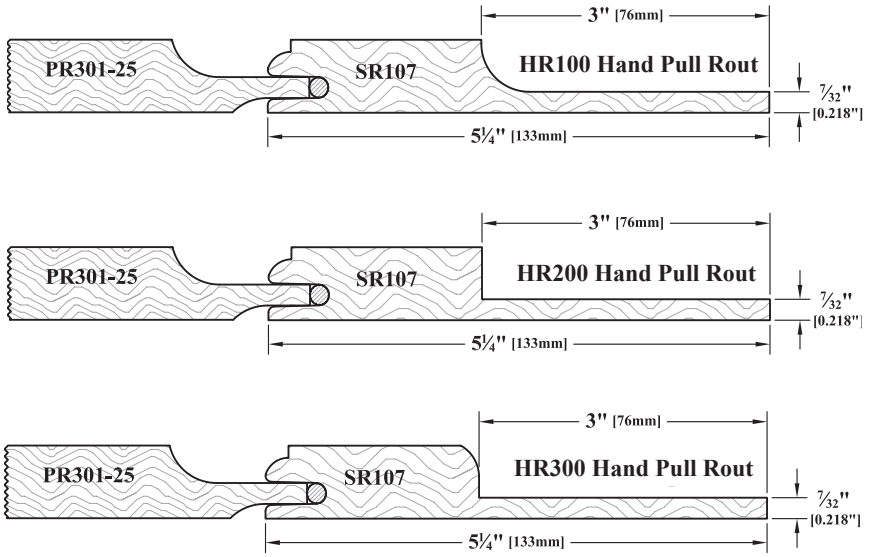

Hand Pull Rout - Not Full Length (NFL)

Below is an example of a **"Not Full Length"** Hand Pull Rout on a **Model D** appliance panel using the **HR100** profile.

To order please specify:

A) "Not Full Length (NFL)"

B) The Stile receiving the Hand Pull, left or right.

C) All Stile / Rail part sizes.

D) The distance from the top of the door to the top of the Hand Pull Rout.

E) The distance from the bottom of the door to the bottom of the Hand Pull Rout.

F) The actual length of the Hand Pull Rout.

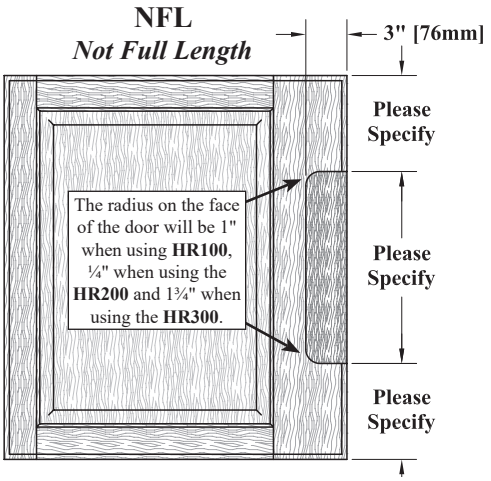

Hand Pull Rout - Full Length (FL)

Below is an example of a **"Full Length"** Hand Pull Rout on a door being used as a **Model B** appliance panel using the **HR200** profile.

To order please specify:

A) "Full Length (FL)"

B) The stile receiving the Hand Pull, left or right.

C) All Stile / Rail part sizes.

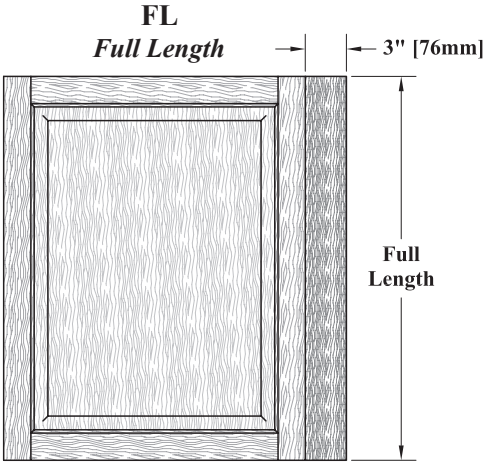

▶ **For PRICING** ▶ *See Section **F.7*** in our current Wholesale Pricing Catalog.

Ordering & Pricing Notes: Hand Pull Routs - HR100, HR200, HR300		
Ordering Guidelines		
1	**Order Forms**	Please indicate your chosen Hand Pull Rout option (**HR100**, **HR200** or **HR300**), as well as all information specified in the notes on the previous page, in the ***Special Instruction*** area of the order form.
Pricing		
1	**Pricing**	Please see ***Section F.7*** of our current **Wholesale Pricing Catalog**.

Technical Notes: Hand Pull Routs - HR100, HR200, HR300		
Cabinet Door & Drawer Front Options (Chapter B)		
1	**Door Styles**	A Hand Pull Rout is available on most standard door styles, also **Model B** and **Model D** appliance panels.
Sizes / Dimensions		
1	**Typical Part Sizes**	A Hand Pull Rout is typically 3" [76.2mm] wide. *To maintain a 2¼" [57.2mm] width on the face of the stile, a 5¼" [133.4mm] wide stile is required. Non-standard parts charges may also apply.* See ***Section A.5*** for more information.

F

Hand Pull Rout Options - HR400, HR500

These Hand Pull Rout options are relief cuts that allow additional space behind your hardware for hand clearance.

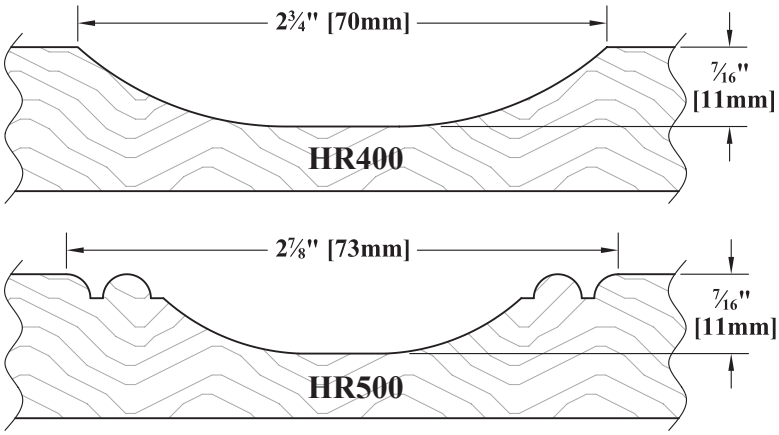

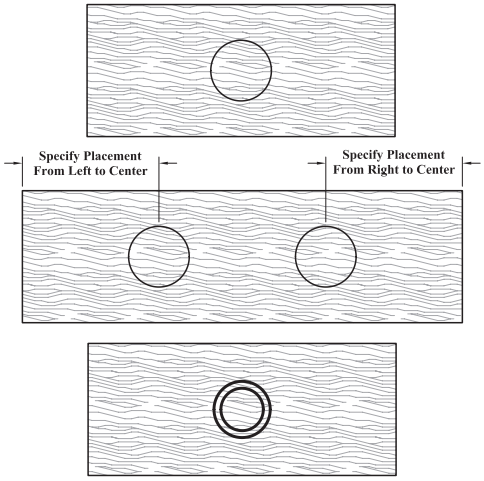

Ordering & Pricing Notes: Hand Pull Routs - HR400, HR500		
Ordering Guidelines		
1	**Order Forms**	Applicable order forms will include spaces to indicate your chosen option.
2	**Placement**	Single routs will be centered on the width and height of the drawer front unless otherwise specified.
		When there are two routs, please indicate the distance from the left edge to center and the distance from the right edge to center in the ***"Special Instructions"*** area on the order form, as shown in the drawing above. Routs will be centered on the height of the drawer front unless otherwise specified.
Pricing		
1	**Pricing**	Please see ***Section F.7*** of our current **Wholesale Pricing Catalog**.

Technical Notes: Hand Pull Routs - HR400, HR500		
Cabinet Door & Drawer Front Options (Chapter B)		
1	**Door Styles**	**HR400** and **HR500** are available on solid wood and raw MDF slab and RP drawer fronts.
Sizes / Dimensions		
1	**Rout Sizes**	**HR400** and **HR500** are fixed at the sizes shown in the drawings above.

▶ **For PRICING** ▶ *See Section **F.7*** in our current Wholesale Pricing Catalog.

F

Finger Pull Rout Options - FP100, FP200, FP500

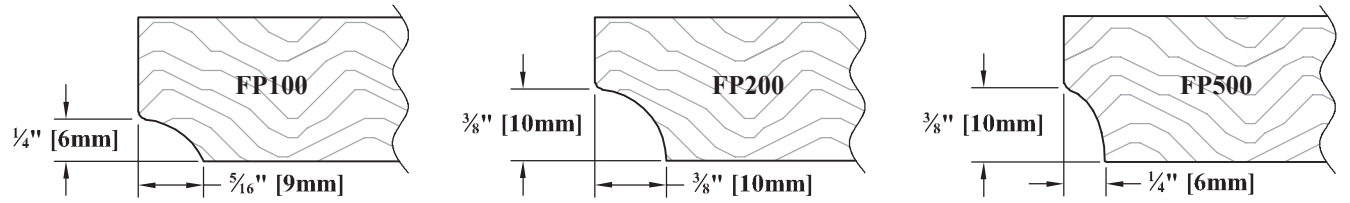

*** Please refer to the compatibility chart on our Web Site to determine if your choice of outside edge profile accepts a finger pull. ***

Full Width Finger Pull and Placement - FP100, FP200, FP500

Please use these abbreviations to specify the placement of the full width finger pull. *All finger pulls are viewed from the face of the door or drawer front.*	
Top	T
Bottom	B
Left	L
Right	R

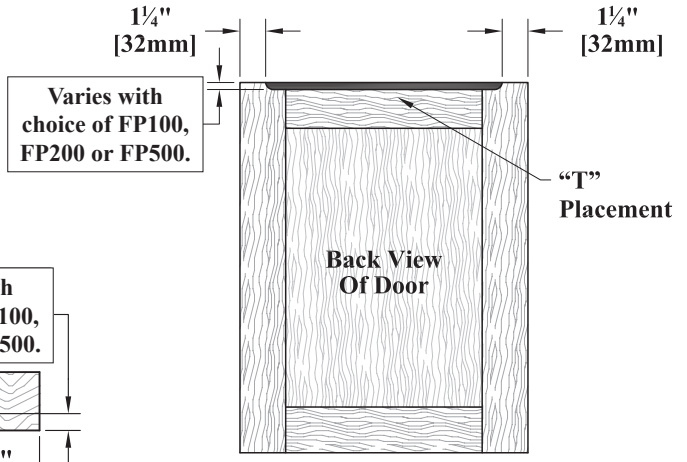

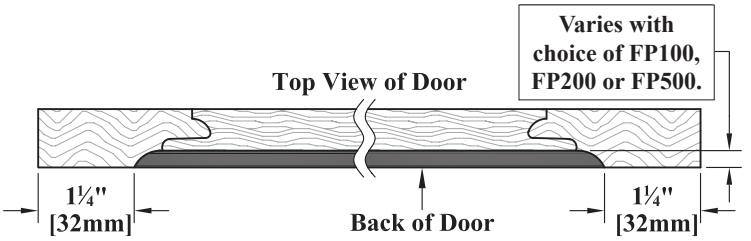

5" Wide Finger Pull and Placement - FP100, FP200, FP500

Please use these abbreviations to specify the placement of the 5" wide finger pull. *All finger pulls are viewed from the face of the door or drawer front.*			
	Left	**Center**	**Right**
Top	TRL	TRC	TRR
Bottom	BRL	BRC	BRR
	Top	**Center**	**Bottom**
Left	LST	LSC	LSB
Right	RST	RSC	RSB

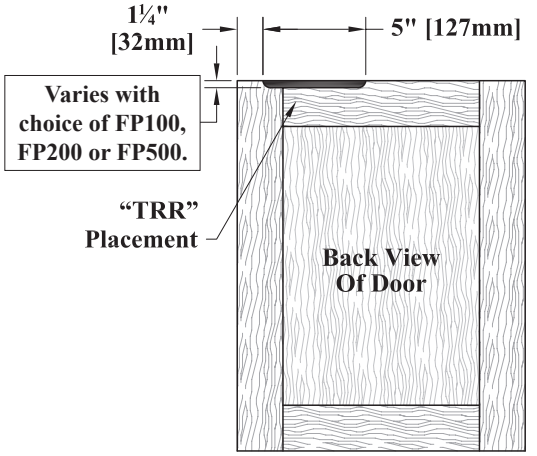

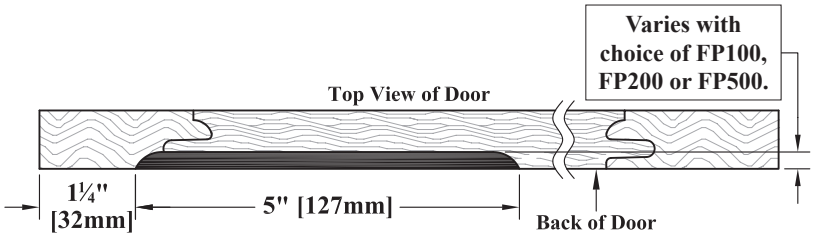

▶ **For PRICING** ▶ *See Section **F.7*** in our current Wholesale Pricing Catalog.

Finger Pull Rout Options - FP300, FP400

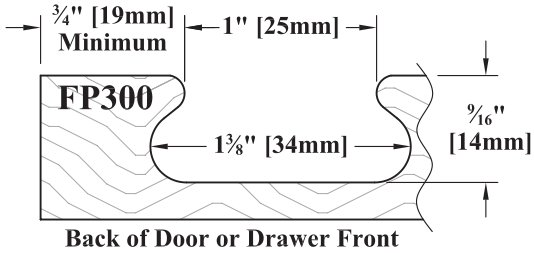

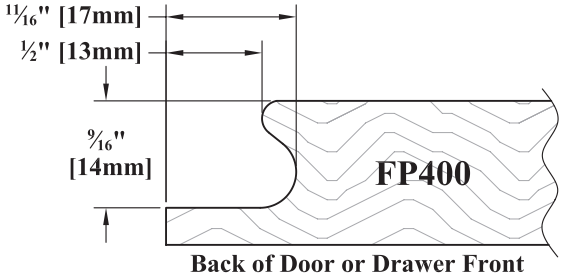

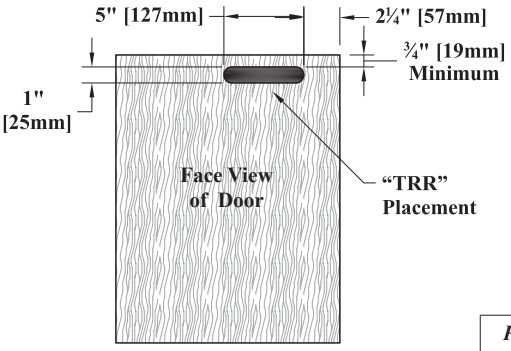

FP300 - Horizontal Orientation

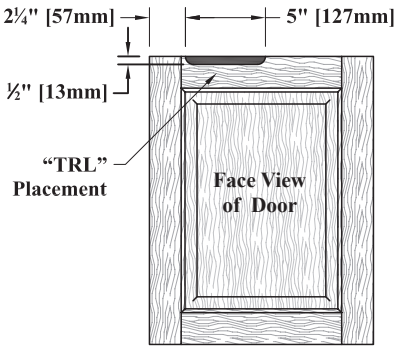

FP400 - Horizontal Orientation

Please use these abbreviations to specify the placement of the FP300 or FP400 finger pull on your Order Form.

All finger pulls are viewed from the face of the door or drawer front.

Horizontal Orientation	Left	Center	Right
Top Rail	TRL	TRC	TRR
Bottom Rail	BRL	BRC	BRR
Vertical Orientation	**Top**	**Center**	**Bottom**
Left Stile	LST	LSC	LSB
Right Stile	RST	RSC	RSB

FP300 - Vertical Orientation

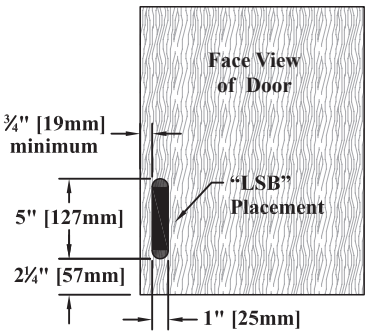

FP400 - Vertical Orientation

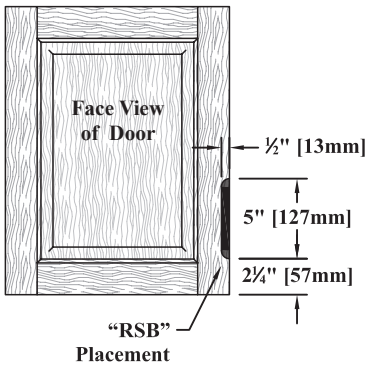

▶ **For PRICING** ▶ *See Section **F.7*** in our current Wholesale Pricing Catalog.

Ordering & Pricing Notes: Finger Pull Routs		
Ordering Guidelines		
1	**Order Forms**	Applicable order forms will include spaces to indicate your chosen option.
2	**Finger Pull Placement**	Use charts on the previous pages for abbreviations when specifying placement of your finger pulls on our WalzCraft order forms.
Pricing		
1	**Pricing**	Please see ***Section F.7*** of our current **Wholesale Pricing Catalog**.

F

Technical Notes: Finger Pull Routs		
Cabinet Door & Drawer Front Options (Chapter B, V)		
1	**Style 1050/1050***	Finger pulls are ***not available*** at the top or bottom of **Style 1050/1050*** doors and drawer fronts.
2	**FP300**	Available on Contemporary Slab & Batten doors / Slab & RP drawer fronts (***Sections B.9 and B.16***).
Finish Options (Chapter R)		
1	**3D Laminate (RTF)**	**FP500** is the only finger pull rout option available on doors & drawer fronts with 3D Laminate (RTF).
General Information (Chapter A)		
1	**FP300, FP400**	Non-standard part sizes may be restricted based on the size and placement of the finger pull. See ***Section A.5*** for more information.
Profile Options (Chapter E)		
1	**Outside Edge Profiles**	Please reference the ***Outside Edge Profile Compatibility*** chart on our website under **Resources / Technical Information** for compatible outside edge profiles.
Sizes / Dimensions		
1	**Minimum Width**	The minimum width of a door or drawer front with a finger pull on top or bottom is 6" [152.4mm].
2	**Minimum Height**	The minimum height of a door or drawer front with a finger pull on a side is 6" [152.4mm].
3	**Rout Width**	When choosing the 5" [127.0mm] wide finger pull option, doors under 7½" [190.5mm] will have the 5" [127.0mm] width reduced, as a 1¼" [31.8mm] minimum space on either side of the finger pull must be maintained.

► **For PRICING** ► *See Section **F.7*** in our current Wholesale Pricing Catalog.

Finger Pull Moldings - Applied

⅝" [15.9mm] Finger Pull Moldings

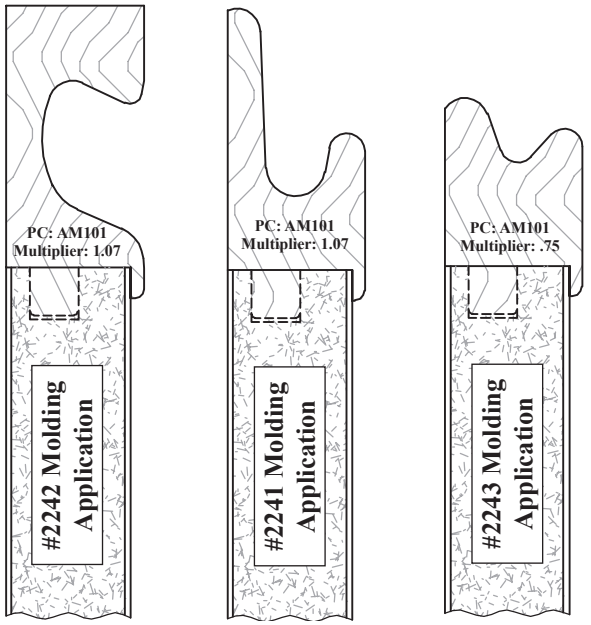

¾" [19.1mm] Finger Pull Moldings

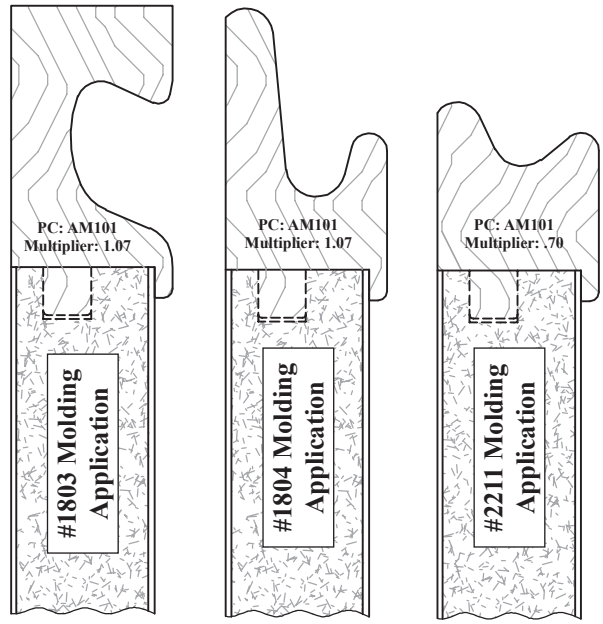

Please use these abbreviations to specify the placement of the applied finger pull molding. All finger pull moldings are viewed from the face of the door or drawer front.			
Top	T	**Right**	R
Bottom	B	**Top & Bottom**	T/B
Left	L	**Left & Right**	L/R

Ordering & Pricing Notes: Finger Pull Molding - Applied

	Ordering Guidelines	
1	**Order Forms**	Applicable order forms will include space to indicate your chosen option(s).
	Pricing	
1	**Pricing**	Please see ***Section F.8*** of our current **Wholesale Pricing Catalog**.

Technical Notes: Finger Pull Molding - Applied

	Cabinet Door & Drawer Front Options (Chapter B, V)	
1	**#1803, #1804 and #2211 Solid Wood Finger Pull Moldings**	**Available with:** • **Style 60** doors & drawer fronts. • **Style 2223** Melamine doors and drawer fronts at ¾" nominal thickness. See Melamine Sheet Stock in ***Section V.4*** for exact melamine thicknesses with tolerances. • **Style 2224** High Pressure Laminate doors and drawer fronts at ¾" [19.1mm] thick. • **Style 500** raw MDF or 3D Laminate (RTF) doors & drawer fronts.
2	**#2241, #2242 and #2243 Solid Wood Finger Pull Moldings**	**Available with:** • **Style 2223** Melamine doors and drawer fronts at ⅝" nominal thickness. See Melamine Sheet Stock in ***Section V.4*** for exact melamine thicknesses with tolerances. • **Style 2224** High Pressure Laminate doors and drawer fronts at ⅝" [15.9mm] thick.
	Finish Options (Chapter R)	
1	**Finishing**	Finishing is an available option.
	Functional Options (Chapter F)	
1	**Mortise & Tenon**	A mortise & tenon joint is used to connect the finger pull molding to the door or drawer front. The mortise and the tenon both stop ½" from each edge of the door, thus concealing the joint and preventing it from being seen once the finger pull molding is applied.
	Molding Options (Chapter N)	
1	**8' [2438.4mm] Lengths**	These moldings are also available in 8' [2438.4mm] lengths. See ***Section N.9***.

Drawer Front Scoop Options

SC100 — Drawer Front Scoop Option

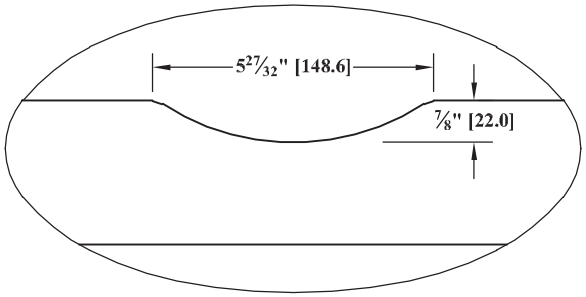

SC200 — Drawer Front Scoop Option

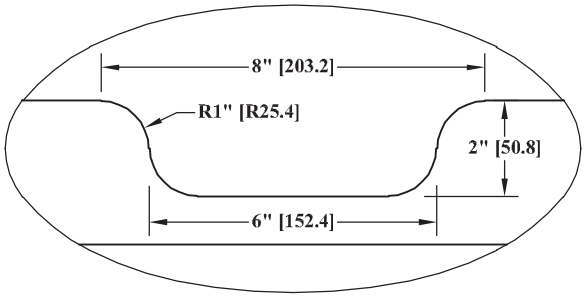

F

Ordering & Pricing Notes: Drawer Front Scoops

		Ordering Guidelines
1	**Order Forms**	Please use ***"Advanced Version"*** of the ***Drawer Front Order Form (E•Z Form #3)***.
		Pricing
1	**Pricing**	Please see ***Section F.9*** of our current **Wholesale Pricing Catalog**.

Technical Notes: Drawer Front Scoops

		Cabinet Door & Drawer Front Options (Chapter B, V)
1	**Drawer Front Styles**	Available with the following drawer front styles: **34SQA*, 100SQE*, 1270*, 500***.
		Convex / Concave Options (Chapter D)
1	**Convex / Concave**	Drawer front scoops are available with convex / concave drawer fronts.
		Finish Options (Chapter R)
1	**3D Laminate (RTF)**	**Style 500*** drawer fronts with **SC100** and **SC200** are available with all 3D Laminate (RTF) patterns.
		Profile Options (Chapter E)
1	**Outside Edge Profiles**	Solid wood and raw MDF drawer fronts with scoops are available with all outside edge profiles from ***Section E.15***. • The ★ indicates outside edge profiles that are available on products using 3D Laminate (RTF).
		Profile is applied last so it will follow the shape of the scoop.
		When needed please see our ***Profile Reveal Width*** chart on our website under ***Resources > Technical Information*** to see outside edge profile widths.
		Sizes / Dimensions
1	**Scoop Dimensions**	Drawer Front Scoop Option **SC100** is 5 27/32"W x 7/8"H [148.6mm x 22.2mm].
		Drawer Front Scoop Option **SC200** is 8"W x 2"H [203.2mm x 50.8mm].
2	**Minimum Drawer Front Size**	**SC100:** Minimum drawer front width is 8" [203.2mm] + (profile width x 4). Minimum drawer front height is 3" [76.2mm] + (profile width x 2).
		SC200: Minimum drawer front width is 10" [254.0mm] + (profile width x 4). Minimum drawer front height is 3" [76.2mm] + (profile width x 2).
		See **Profile-Reveal Widths** chart on our website: **Resources / Technical Information**.

▶ **For PRICING** ▶ *See Section **F.9*** in our current Wholesale Pricing Catalog.

Dowel Hole Patterns

DHP1 — Dowel Hole Pattern

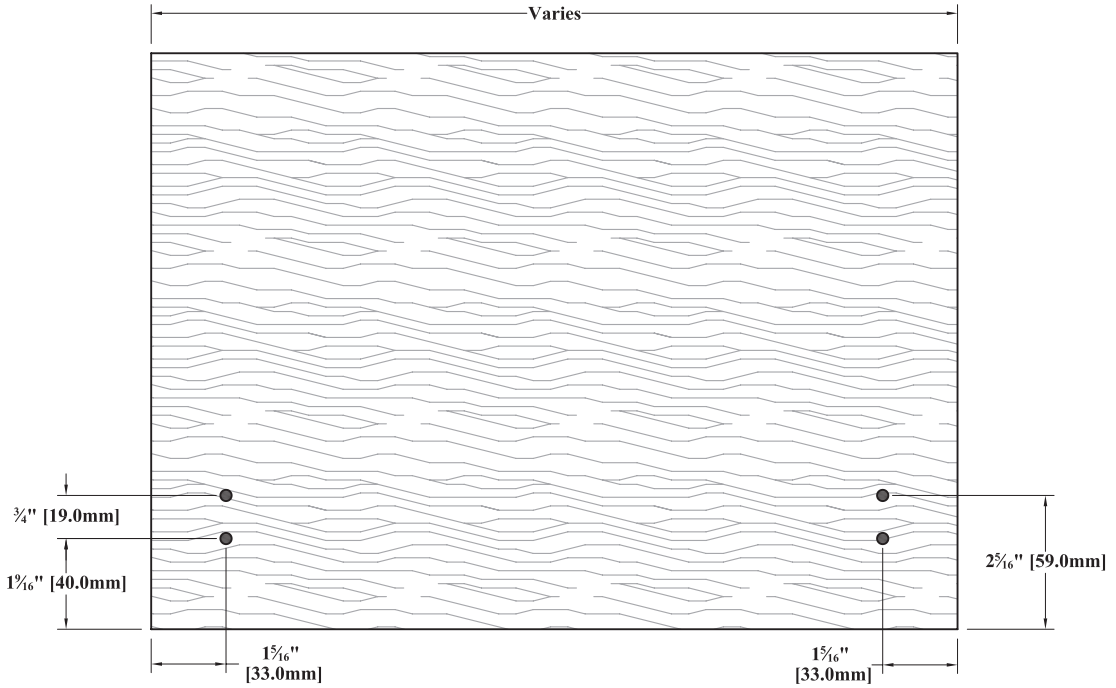

5mm Diameter Holes x 12.7mm Deep

DHP2 — Dowel Hole Pattern

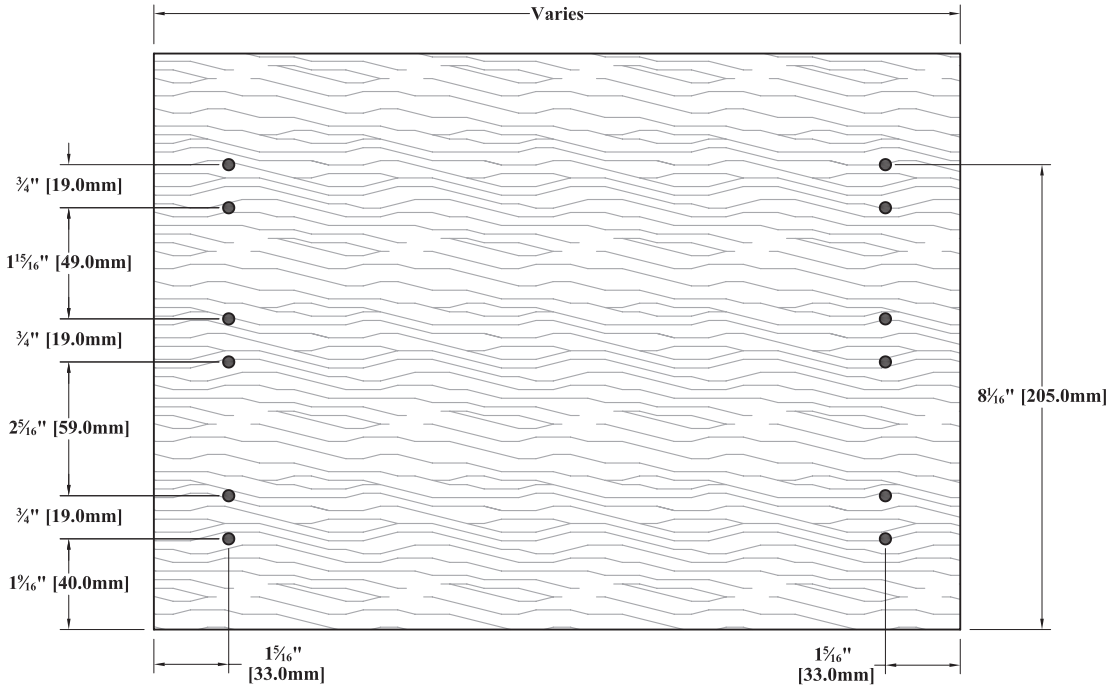

5mm Diameter Holes x 12.7mm Deep

Continued on next page...

Ordering & Pricing Notes: Dowel Hole Patterns		
		Ordering Guidelines
1	**Order Forms**	Please indicate **DHP1** or **DHP2** in the ***Special Instructions*** column on your door or drawer front order form.
		Pricing
1	**Pricing**	Please see ***Section F.10*** of our current **Wholesale Pricing Catalog**.

Technical Notes: Dowel Hole Patterns		
		Cabinet Door & Drawer Front Options (Chapter B)
1	**Available Styles**	Available with all door and drawer front styles with the exception of Contemporary Slab & Batten doors, and molded drawer fronts.
		Functional Options (Chapter F)
1	**Hinge Boring**	Hinge boring is not compatible with dowel hole patterns.
		General Information (Chapter A)
1	**Ready to Assemble**	Doors and drawer fronts with dowel hole patterns are not available Ready to Assemble **(RTA)**.
2	**Warranties**	Please see ***Section A.8 - Warranties*** for more information on Glued-Up Panel expansion/contraction, warping, bowing and twisting.
		Profile Options (Chapter E)
1	**Outside Edge Profiles**	Available with all outside edge profiles from ***Sections E.15*** and ***E.16***. • Also available with Molder Edge (ME) profiles from ***Section E.9***.
2	**Stile & Rail Profiles**	Available with all Traditional stile & rail profiles from ***Sections E.1***, ***E.2***, and ***E.3***.
		Available with most **MP600/MP6000**, **MP700**, and **MP900** miter profiles from ***Sections E.9***, ***E.10***, and ***E.11***. • Compatibility will be reviewed at the time you place a quote or an order.
		Available with all applied molding stile & rail profiles from ***Sections E.4***, ***E.5***, and ***E.6***.
3	**Nexus Profiles**	Available with all nexus profiles with the exception of **NP407**.
4	**Center Panel Profiles**	Available with all center panel profiles from ***Sections E.12***, ***E.13***, and ***E.14***.
5	**RP (Raised Panel) Profiles**	Available with most RP (Raised Panel) drawer front profiles from ***Section B.16***. • Compatibility will be reviewed at the time you place a quote or an order.
		Sheet Stock Options (Chapter K)
1	**Sheet Stock**	For sheet stock items with dowel hole patterns, please order as Style 60 doors or drawer fronts from ***Sections B.10*** or ***B.11***.
		Sizes/Dimensions
1	**Minimum Height**	Minimum height for any product receiving **DHP1** is 3 29/32" [99.0mm].
		Minimum height for any product receiving **DHP2** is 9 21/32" [245.0mm].
2	**Maximum Height**	Maximum height for any product receiving **DHP1** or **DHP2** is 59 1/16" [1500.0mm].
3	**Minimum Width**	Minimum width for any product receiving **DHP1** or **DHP2** is 6" [152.4mm].
4	**Maximum Width**	Maximum width for any product receiving **DHP1** or **DHP2** is 36" [914.4mm].
5	**Thicknesses**	All material 5/8" [15.9mm] thick or greater can receive **DHP1** or **DHP2**.
6	**Minimum Stile Width**	Minimum width for any stile receiving **DHP1** or **DHP2** is 2" [50.8mm].

Dowel Hole Patterns - END

▶ **For PRICING** ▶ *See Section **F.10*** in our current Wholesale Pricing Catalog.

F